INSTALLATION MANUAL

SAILOR®

SAILOR 6222 VHF DSC

Thrane & Thrane

SAILOR 6222 VHF DSC

Installation manual

Document number: 98-132904-A

Release date: January 17, 2011

Disclaimer

Any responsibility or liability for loss or damage in connection with the use of this product and the accompanying documentation is disclaimed by Thrane & Thrane. The information in this manual is provided for information purposes only, is subject to change without notice and may contain errors or inaccuracies.

Manuals issued by Thrane & Thrane are periodically revised and updated. Anyone relying on this information should acquire the most current version e.g. from http://www.thrane.com or from the distributor.

Thrane & Thrane is not responsible for the content or accuracy of any translations or reproductions, in whole or in part, of this manual from any other source.

Copyright

© 2011 Thrane & Thrane A/S. All rights reserved.

Trademark Acknowledgements

- **SAILOR** is a registered trademarks of Thrane & Thrane A/S.
- Other product and company names mentioned in this manual may be trademarks or trade names of their respective owners.

Safety warning

The following general safety precautions must be observed during all phases of operation, service and repair of this equipment. Failure to comply with these precautions or with specific warnings elsewhere in this manual violates safety standards of design, manufacture and intended use of the equipment. Thrane & Thrane assumes no liability for the customer's failure to comply with these requirements.

Ground the equipment

To minimise shock hazard, the SAILOR 6222 VHF DSC unit must be connected to an electrical ground and the cable instructions must be followed.

RF exposure hazards and instructions

Your Thrane & Thrane radio set generates electromagnetic RF (radio frequency) energy when transmitting. To ensure that you and those around you are not exposed to excessive amounts of energy and thus to avoid health hazards from excessive exposure to RF energy, all persons must be at least 3ft (0.9 m) away from the antenna when the radio is transmitting.

Warranty limitation

IMPORTANT - The radio is a sealed waterproof unit (classified IPX8). To create and maintain its waterproof integrity it was assembled in a controlled environment using special equipment. The radio is not a user maintainable unit, and under no circumstances should the unit be opened except by authorized personnel. Unauthorized opening of the unit will invalidate the warranty.

Installation and service

Installation and general service must be done by skilled service personnel.

Record of revisions

Rev.	Description	Release Date	Initials
A	Original document	17 January 2011	UFO

Preface

Radio for occupational use

The SAILOR 6222 VHF DSC fulfils the requirements of the Marine Equipment Directive 96/98/EC and the amending Directive 2002/75/EC and is intended for use in maritime environment.

SAILOR 6222 VHF DSC is designed for *occupational use only* and must be operated by licensed personnel only.

SAILOR 6222 VHF DSC is not intended for use in an uncontrolled environment by general public.

SAILOR 6222 VHF DSC is designed for installation by a skilled service person.

Training information

The SAILOR 6222 VHF DSC is designed for *occupational use only* and is also classified as such. It must be operated by licensed personnel only. It must only be used in the course of employment by individuals aware of both the hazards as well as the way to minimize those hazards

The radio is thus NOT intended for use in an uncontrolled environment by general public. The SAILOR 6222 VHF DSC has been tested and complies with the FCC RF exposure limits for *Occupational Use Only*. The radio also complies with the following guidelines and standards regarding RF energy and electromagnetic energy levels including the recommended levels for human exposure:

- FCC OET Bulletin 65 Supplement C, evaluating compliance with FCC guidelines for human exposure to radio frequency electromagnetic fields.
- American National Standards Institute (C95.1) IEEE standard for safety levels with respect to human exposure to radio frequency electromagnetic fields, 3 kHz to 300 GHz
- American National Standards Institute (C95.3) IEEE recommended practice for the measurement of potentially hazardous electromagnetic fields - RF and microwaves.

Below the RF exposure hazards and instructions in safe operation of the radio within the FCC RF exposure limits established for it are described.

Warning

Your Thrane & Thrane radio set generates electromagnetic RF (radio frequency) energy when it is transmitting. To ensure that you and those around you are not exposed to excessive amounts of that energy (beyond FCC allowable limits for occupational use) and thus to avoid health hazards from excessive exposure to RF energy, FCC OET bulletin 65 establishes an Maximum Permissible Exposure (MPE) radius of 3 ft. (0.9m) for the maximum power of your radio (25W selected) with an half wave omni-directional antenna having a maximum gain of 3 dB (5.2dBi). This means all persons must be at least 3 ft. (0.9m) away from the antenna when the radio is transmitting.

Installation

1. An omni-directional antenna with a maximum power gain of 5.2 dBi must be mounted at least 9.6 ft. (2.9m) above the highest deck where people may be staying during radio transmissions. The distance is to be measured vertically from the lowest point of the antenna. This provides the minimum separation distance which is in compliance with RF exposure requirements and is based on the MPE radius of 3 ft. (0,9m) plus the 6.6 ft. (2m) height of an adult.
2. On vessels that cannot fulfil requirements in item 1, the antenna must be mounted so that its lowest point is at least 3 ft. (0.9m) vertically above the heads of people on deck and all persons must be outside the 3 ft. (0.9m) MPE radius during radio transmission.
   - Always mount the antenna at least 3ft (0.9m) from possible human access.
   - Never touch the antenna when transmitting
   - Use only authorized T&T accessories.
3. If the antenna has to be placed in public areas or near people with no awareness of the radio transmission, the antenna must be placed at a distance not less than 6 ft. (1.8m) from possible human access.

Failure to observe any of these warnings may cause you or other people to exceed FCC RF exposure limits or create other dangerous conditions.

Manual overview

This manual has the following chapters and appendices:

- *Introduction* contains a description of the VHF radio.
- *Installation* explains how to mount the VHF radio and how to connect accessories and external equipment.
- *Service & maintenance* contains support information including lists of accessories and a troubleshooting guide.
- Appendices with *Technical specifications* and *System configurations*

Related documents

Title and description	Document number
SAILOR 6222 VHF DSC, Installation guide	98-132281
SAILOR 6222 VHF DSC User manual	98-131184
SAILOR 6101 and 6103 Alarm Panel, Installation and user manual	98-130981
Moxa EtherDevice Switch EDS-205A/208A Series Hardware Installation Guide (SAILOR 6197 Ethernet Device)	1802002050023
Emergency call sheet	98-132369

Table Preface-1: Related documents

Online training for Thrane partners

As a Thrane Partner you have access to free of charge technical training in this SAILOR product covering installation, commissioning and repair.

For details on available training classes please consult the Thrane Academy at http://extranet.thrane.com/Training.aspx.

To learn more on CAN-bus as used with this product you may take the eLearning course "Introduction to CAN-bus" available at Thrane Academy at http://extranet.thrane.com/Training.aspx.

Table of contents

Chapter 1 Introduction

1.1 VHF radio with DSC Class A 1-1

1.2 Accessories available 1-4

Chapter 2 Installation

2.1 Unpacking and initial inspection 2-1

2.2 Installing the VHF radio 2-2

2.3 Connectors 2-10

2.4 VHF and DSC antenna installation 2-18

2.5 Accessories 2-20

Chapter 3 First-time power up

3.1 General use and navigation 3-1

3.2 Entering the MMSI number 3-2

Chapter 4 Service & maintenance

4.1 Contact for support 4-1

4.2 Maintenance 4-1

4.3 Troubleshooting guide 4-3

4.4 Warranty and returning units for repair 4-6

Appendix A Technical specifications

A.1 Transceiver unit SAILOR 6222 VHF DSC A-1

A.2 General DSC specifications A-3

A.3 NMEA data rates and formats A-3

A.4 SAILOR 6090 Power Converter 24–12 V A-4

Appendix B System configurations

B.1 System configuration examples B-1

B.2 Cable requirements B-18

Glossary Glossary-1

Index Index-1

List of figures

Figure 1-1: Controls on the front plate 1-2
Figure 1-2: System configuration, example 1-6
Figure 2-1: Desktop mounting 1/2 2-3
Figure 2-2: Mounting with the mounting bracket 2-5
Figure 2-3: Drilling plan for the mounting bracket 2-5
Figure 2-4: SAILOR 6222 VHF DSC Dimension for flush mount 2-6
Figure 2-5: Cutout for flush mount 2-6
Figure 2-6: Flush mount 2-7
Figure 2-7: SAILOR 6090 Power Converter, dimensions 2-8
Figure 2-8: Connecting the SAILOR 6090 Power Converter 2-8
Figure 2-9: SAILOR 6201 Handset with cradle 2-9
Figure 2-10: Connections at the rear panel 2-11
Figure 2-11: NMEA interface description 2-13
Figure 2-12: Antenna positioning 1/2 2-19
Figure 2-13: Antenna positioning, 2/2 2-19
Figure 2-14: SAILOR 6207 Connection Box for parallel handsets, mounting 2-21
Figure 2-15: SAILOR 6207 Connection Box for parallel handsets, wiring 2-21
Figure 2-16: SAILOR 6207 Connection Box for parallel handsets, diagram 2-22
Figure 2-17: SAILOR 6208 Control Unit Connection Box, mounting 2-23
Figure 2-18: SAILOR 6208 Control Unit Connection Box for parallel handsets, wiring 2-23
Figure 2-19: SAILOR 6208 Control Unit Connection Box, diagram 2-24
Figure 4-1: Fuse in the power connector 4-5
Figure 4-2: Fuse in the SAILOR 6090 Power Converter 4-5
Figure B-1: System configuration, SAILOR 6090 Power Converter B-2
Figure B-2: System configuration, SAILOR N163S Power Supply B-3
Figure B-3: System configuration, SAILOR 6201 Handset and N420 DC Power Supply B-4
Figure B-4: System configuration, SAILOR 6201, GPS, ext. loudspeaker and alarms B-5
Figure B-5: System configuration, GPS and SAILOR 6270 External loudspeaker B-6
Figure B-6: System configurations, 2 SAILOR 6201 Handsets and a GPS B-7
Figure B-7: System configurations, extra handset SAILOR 6201 in SAILOR 6207 ..... B-8
Figure B-8: System configuration, SAILOR 6202 Handmic., SAILOR 6201 Handset, GPS B-9
Figure B-9: System configuration, GPS and SAILOR 6208 Connection Box B-10
Figure B-10: System configuration, GPS and SAILOR 6207 Connection Box B-11
Figure B-11: System configuration, CAN bus, SAILOR 6204 CSM, close to the VHF radio B-12

Figure B-12: System configuration, CAN bus, SAILOR 6204 CSM, not close to the VHF radio... B-13
Figure B-13: System configuration, CAN bus, SAILOR 6204 CSM, far from the VHF radio B-14
Figure B-14: System configuration, CAN bus, 2 SAILOR 6204 CSMs, close to VHF radio B-15
Figure B-15: System configuration: CAN bus, 2 SAILOR 6204 CSMs, far from VHF radio..... B-16
Figure B-16: System configuration: CAN bus, 2 SAILOR 6204 CSMs, close to each other B-17

List of tables

Table Preface-1:Related documents ..... -vi
Table 1-1: Accessories available 1-4
Table 2-1: Compass safe distance 2-3
Table 2-2: Pin allocation, connector at the front panel 2-10
Table 2-3: Pin allocation, ACC connector 2-12
Table 2-4: Pin allocation, AUX connector 2-14
Table 2-5: Pin allocation, CTRL connector 2-15
Table 2-6: Pin allocation, LAN connector 2-16
Table 2-7: Pin allocation, power 2-16
Table 2-8: Part numbers for accessories 2-20
Table 4-1: Troubleshooting guide 4-3
Table A-1: SAILOR 6222 VHF DSC, technical specifications, part 1 ..... A-1
Table A-2: SAILOR 6222 VHF DSC, technical specifications, part 2 ..... A-2
Table A-3: General DSC specifications A-3
Table A-4: NMEA data rates and formats A-3
Table A-5: SAILOR 6090, technical specifications A-4
Table B-1: Cable overview B-18
Table B-2: Cable specifications for cable 2 ..... B-19
Table B-3: Cable specifications for cable 3 ..... B-19
Table B-4: Cable specifications for cable 5 ..... B-20
Table B-5: Cable specifications for cable 8 (AUX) B-21
Table B-6: Cable specifications for cable 8 (CTRL) B-22

Introduction

1.1 VHF radio with DSC Class A

SAILOR 6222 VHF DSC, your new VHF radio with full DSC functionality, is approved to MED, FCC and Industry Canada and is waterproof to the IPx8 and IPx6 standard. As part of the required safety equipment, use the SAILOR 6222 VHF DSC in an emergency situation. However the best way to guarantee functionality in an emergency situation, is to use the radio in daily communication on board.

The VHF radio is a simplex/semi duplex VHF radio. It is designed with an easy-to-use menu-driven setup. You use the soft-keys and the keypad to enter the desired functions, you browse and select a setting using the right selection wheel knob. The large display can be customized for optimum readability and visibility both day and night with several color themes.

The VHF radio can replay the last 240 s of received voice messages. This is a useful feature to minimize misunderstandings and to record messages when the radio is unattended.

With SAILOR connection boxes the VHF radio connects easily to external equipment like additional handsets, water proof hand microphones, control speaker microphone, alarm panel or external speaker. The Ethernet interface enables the VHF radio to be connected to ThraneLINK for remote control and service updates.

For a list of accessories available for the VHF radio see *Part numbers for accessories* on page 2-20 and check with your nearest distributor.

1.1.1 Controls on the front plate

Figure 1-1: Controls on the front plate

1. Loudspeaker.
2. Four soft keys with function title in the display.
3. Large display.
4. Keys 0 to 9 to enter numbers or text.
5. **DW** button to toggle the watch function (dual or triple).
6. Quick selection key for channel 16 and the programmed call channel.
7. Connector for Handset or Handmicrophone.
8. Distress button for sending a Distress alert.
9. Squelch control to mute background noise.
10. Volume wheel knob with key-press function for volume control and power on/off.
11. Selector wheel knob with key-press function for general operation, display color selection and dimming.
12. **1W** button to toggle between high and low power.
13. Replay button to play back up to 240 s voice message.

1.1.2 SAILOR 6222 VHF DSC display

The picture shows the display after start-up. The display holds various fields of information, depending on the currently selected function.

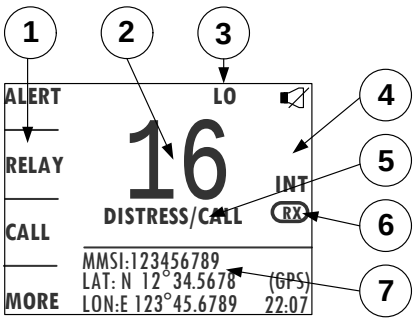

1. Functions you can select with the soft keys. If there are more than 4 functions in the list press the soft key **MORE** to display further functions.
2. Current working channel.
3. **System property icons** with information relevant for the currently selected functions.
4. Channel properties next to the currently selected VHF channel (if any).
5. **Service line** containing current temporary information relevant for the current channel or function.
6. Current state: RX or TX
7. **DSC window** with DSC information (MMSI number, position information and UTC time of position and origin), or specific information relevant to other functions, e.g. Replay, etc.).

For a detailed description of the information shown for each of the functions available see the chapter *Operation* on page 2-7.

1.2 Accessories available

Accessory	Description
SAILOR 6201 Handset with cradle (additional)	One SAILOR 6201 Handset with cradle is included in the delivery of the SAILOR 6222 VHF DSC. You can connect another 2 SAILOR 6201 Handsets.
SAILOR 6203 Handset with cradle	SAILOR 6203 Handset with cradle, waterproof to IPx6.
SAILOR 6202 Hand Microphone	You can use the SAILOR 6202 (waterproof to IPx6 and IPx8) Hand Microphone instead of the handset.
SAILOR 6204 Control Speaker Microphone	With the SAILOR 6204 Control Speaker Microphone you can control the VHF functions of the SAILOR 6222 VHF DSC.
SAILOR 6207 Connection Box for parallel handsets	The SAILOR 6207 Connection Box including Connection Cable 406209-941 is used for easy installation of several SAILOR 6201/03 Handsets
SAILOR 6208 Control Unit Connection Box	The SAILOR 6208 Connection Box including Connection Cable 406208-941 is used for easy installation of external equipment and accessories: • Several SAILOR 6204 Control Speaker Microphones • VDR • SAILOR 6270 External loudspeaker • Alarm panels and GPS input

Table 1-1: Accessories available

Accessory	Description
Connection cables	**5m connection cable for bulkhead mount:** Use this cable in installations where the SAILOR 6201 or 6203 Handset is not connected directly to the SAILOR 6222 VHF, but located in a different position. **5m Connection cable, 1x10 pole**: Use this cable in installations when connecting external equipment to the SAILOR 6222 VHF. This cable is included in the SAILOR 6207 Connection Box for parallel handsets. **5 m Connection cable for SAILOR 6204 Control Speaker Microphone, 1x12 pole** (part number: 406204-940)
SAILOR 6270 External loudspeaker	If you need an additional external loudspeaker you can connect a SAILOR 6270 Loudspeaker. It provides 6 W output power.
SAILOR 6103 Multi Alarm Panel	With the SAILOR 6103 Multi Alarm Panel you can activate GMDSS Distress Alarms. The SAILOR 6103 GMDSS Alarm Panel can be connected to the SAILOR 6222 VHF DSC via the Ethernet interface (LAN connector, ThraneLINK.
SAILOR 6197 Ethernet Switch	The SAILOR 6197 Ethernet Switch is used in installations with SAILOR 6103 GMDSS Alarm Panels and in installations with ThraneLINK. The Ethernet switch has 5 ports.
SAILOR 6090 Power Converter 24 V to 12 V DC	The SAILOR 6090 Power Converter is used to provide 12 V DC for the SAILOR 6222 VHF DSC from a 24 V DC power source.

Table 1-1: Accessories available (Continued)

1.2.1 System configuration – example

The SAILOR 6222 VHF DSC can be customized to suit your installation. The following illustration is one example of a system. For further configuration examples see Appendix B, *System configurations*.

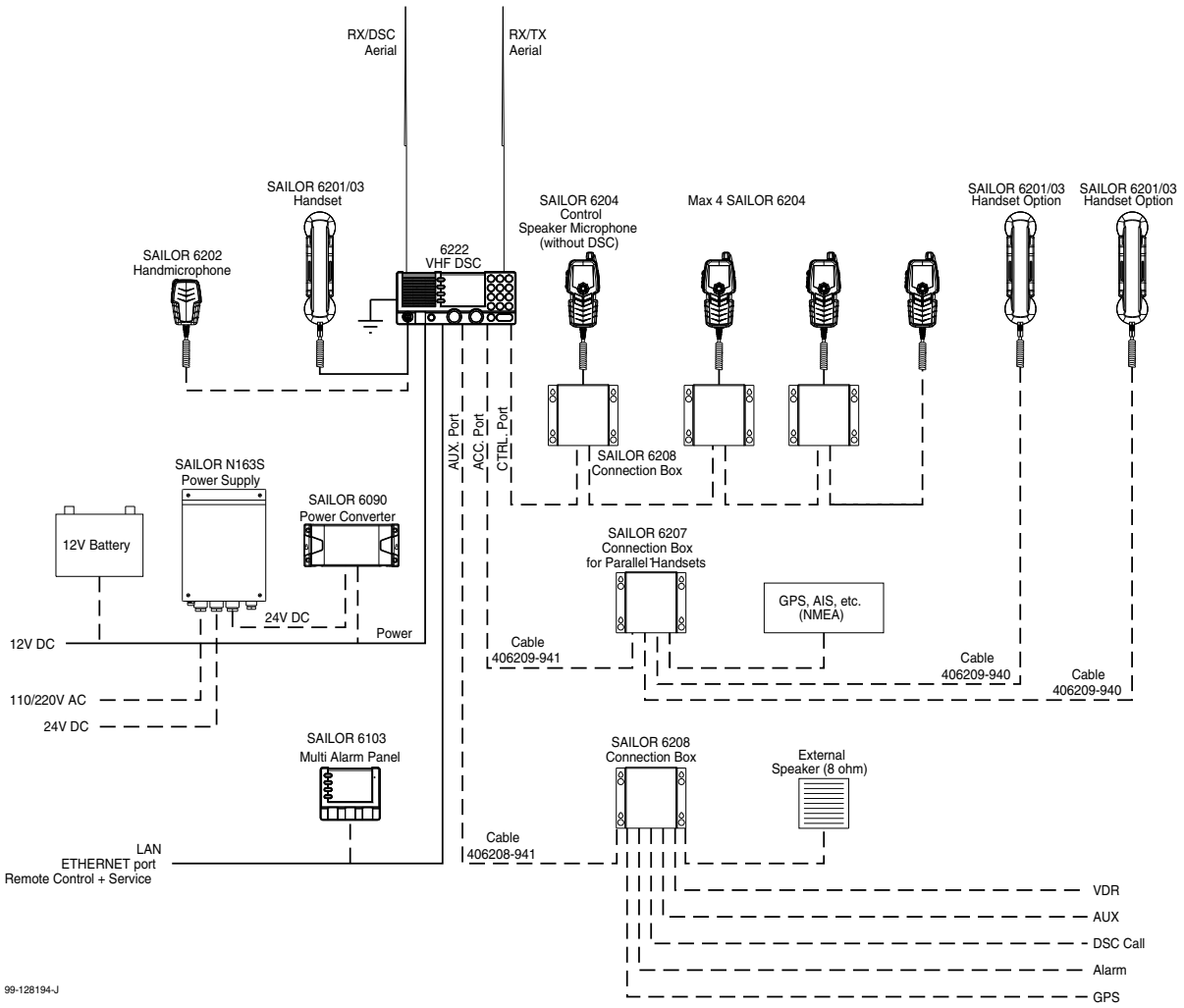

Figure 1-2: System configuration, example

Installation

In this chapter you find information and guidelines for:

- *Unpacking and initial inspection*
- *Installing the VHF radio*
- *Connectors*
- *VHF and DSC antenna installation*
- *Part numbers for accessories*

2.1 Unpacking and initial inspection

The following items are included in the delivery of a SAILOR 6222 VHF DSC:

- SAILOR 6222 VHF DSC
- SAILOR 6201 Handset with cradle
- User manual
- Installation guide
- Emergency call sheet
- Mounting bracket with two wheel knobs
- Connectors for cables
- Power cable, fittings and fuses
- Packaging material
- Kit for flush mount installation, including gasket
- SAILOR 6090 Power Converter 24 to 12 V

2.1.1 Initial inspection

WARNING! To avoid electrical shock, do not apply power to the SAILOR 6222 VHF DSC if there is any sign of shipping damage to any part of the front or rear panel or the outer cover. Read the safety summary at the front of this manual before installing or operating the SAILOR 6222 VHF DSC.

Inspect the shipping carton immediately upon receipt for evidence of mishandling during transport. If the shipping carton is severely damaged or water stained, request that the carrier's agent be present when opening the carton. Save the carton packing material for future use.

Check that the contents of the shipment are according to the enclosed packing list. If the contents are incomplete, if there is mechanical damage or defect, or if the SAILOR 6222 VHF DSC does not work properly, notify your dealer.

After unpacking the SAILOR 6222 VHF DSC, inspect it thoroughly for hidden damage and loose components or fittings.

2.2 Installing the VHF radio

You can mount the VHF radio as a desktop, overhead or flush-mounted unit integrated in the instrument panel.

Provide space enough to access the front panel connectors and for installing a cradle for the speaking device.

Provide **at least 120 mm space at the back** of the SAILOR 6222 VHF DSC radio to allow free air circulation and for cable access.

Cable requirements

All cables attached to the SAILOR 6222 VHF DSC must be shielded. Every shield should have a low impedance connection to an electrical ground.

Before using the SAILOR 6222 VHF DSC for the first time, check that all cables are correctly wired and fastened.

Compass safe distance

Make sure that the VHF radio is far enough from any magnetic compass to avoid influence of the loudspeaker magnet on the compass reading. See the following table

for the safe distance after magnetization between the nearest point of the device and the centre of the compass at which it will produce a deviation of 0.3°.

Device	Compass safe distance
SAILOR 6222 VHF DSC	0.85 m
SAILOR 6201 and 6203 Handset with cradle	0.95 m
SAILOR 6090 Power Converter 24 V – 12 V	0.15 m

Table 2-1: Compass safe distance

2.2.1 SAILOR 6222 VHF DSC with U mounting bracket

The mounting bracket and two knobs are included in the delivery.

Desktop mounting

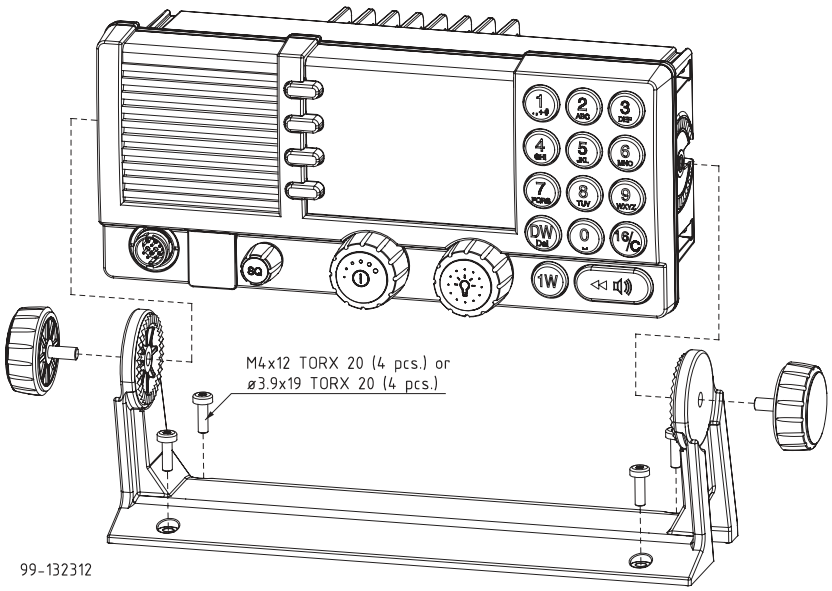

Figure 2-1: Desktop mounting 1/2

Overhead mounting

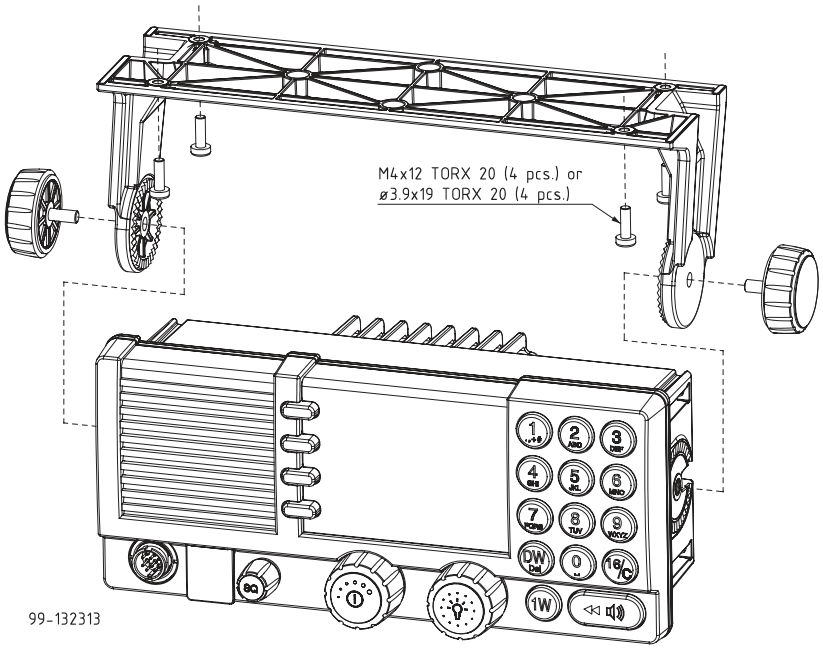

Mounting with U mounting bracket

To mount the VHF radio as tabletop, do as follows:

1. Find a suitable location for the VHF radio. Check that the space is wide/deep enough to accommodate the VHF radio.
2. Fasten the bracket with 4 screws (included in the delivery.)
3. Insert the VHF radio in the bracket and fasten it with the two knobs.

4. The display of the VHF radio should be at an angle of approximately 90° to your line of sight when operating it.

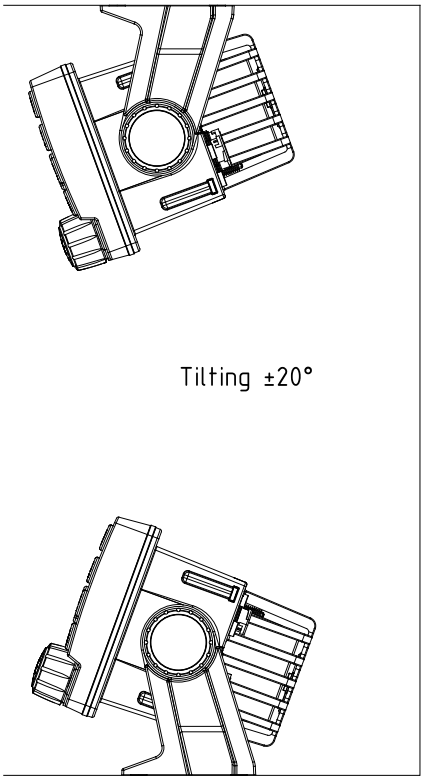

Figure 2-2: Mounting with the mounting bracket

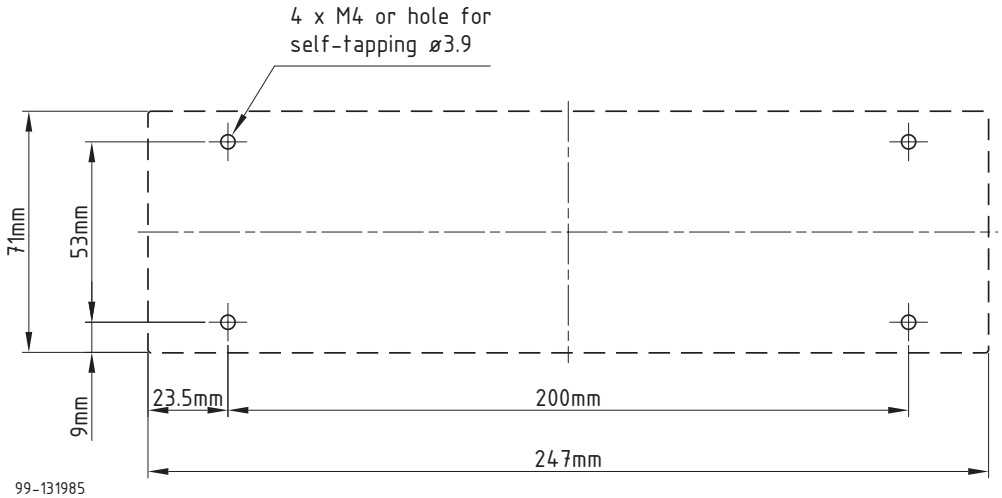

Figure 2-3: Drilling plan for the mounting bracket

2.2.2 SAILOR 6222 VHF DSC for flush mount

You can mount the VHF radio to a flat surface, e.g. an instrument panel.The flush mount installation kit is included in the delivery.

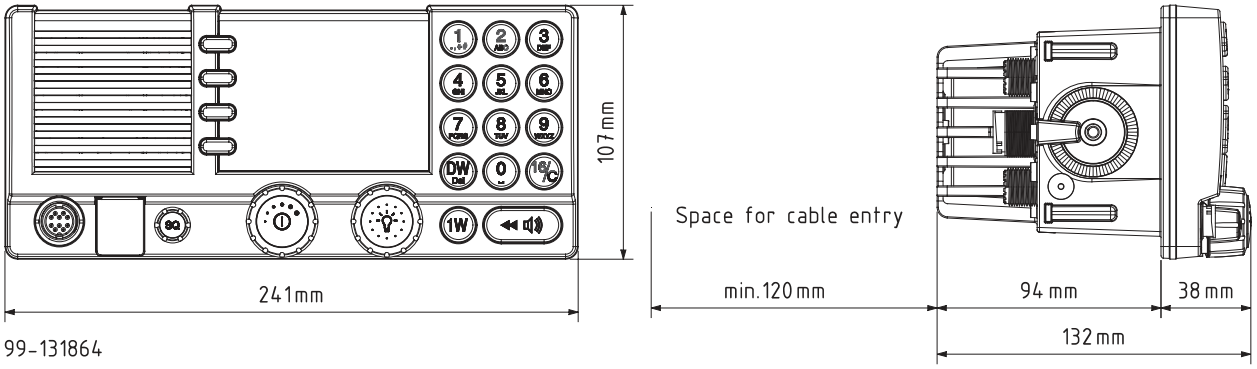

Figure 2-4: SAILOR 6222 VHF DSC Dimension for flush mount

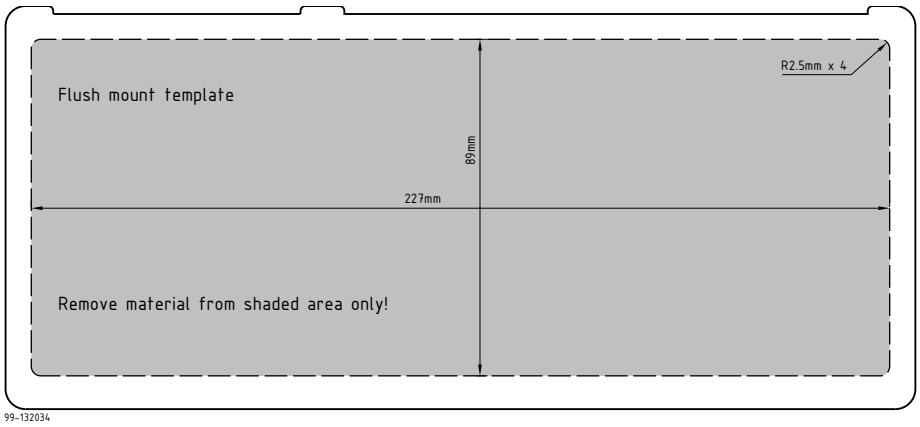

Figure 2-5: Cutout for flush mount

Important **The scaling in the above drawing is not 1:1**. Consequently do not attempt to use a print or copy of this page without checking the dimensions.

1. Find a suitable location for the VHF radio. Check that the space is deep enough to accommodate the VHF radio and an additional min. 120 mm space for cable entry.
2. Keep free distance to allow free air circulation around the VHF radio and to allow sufficient space for access to cables, see the drawing on this page.
3. Cut out the hole for the VHF radio where you want to mount it. Use the cutting template in the installation guide.
4. Mount the 4 square nuts M4 in the cabinet, ensure that they are placed correctly so it is possible to screw in the M4x45 screws.

5. Ensure that the flush mount gasket is placed correctly on the VHF radio.
6. Before mounting the VHF radio be aware that the surface is plane and rigid. If the surface is not plane and/or rigid (stiff) remove the gasket and seal with silicone sealant between the VHF radio and the surface.
7. Slide the VHF radio in the cut-out. Place the flush mount bracket and fasten it with the 4 screws M4x45. Make sure the torque does not exceed 1Nm when fastening the screws.

Note Only use screws supplied with the kit for flush mounting.

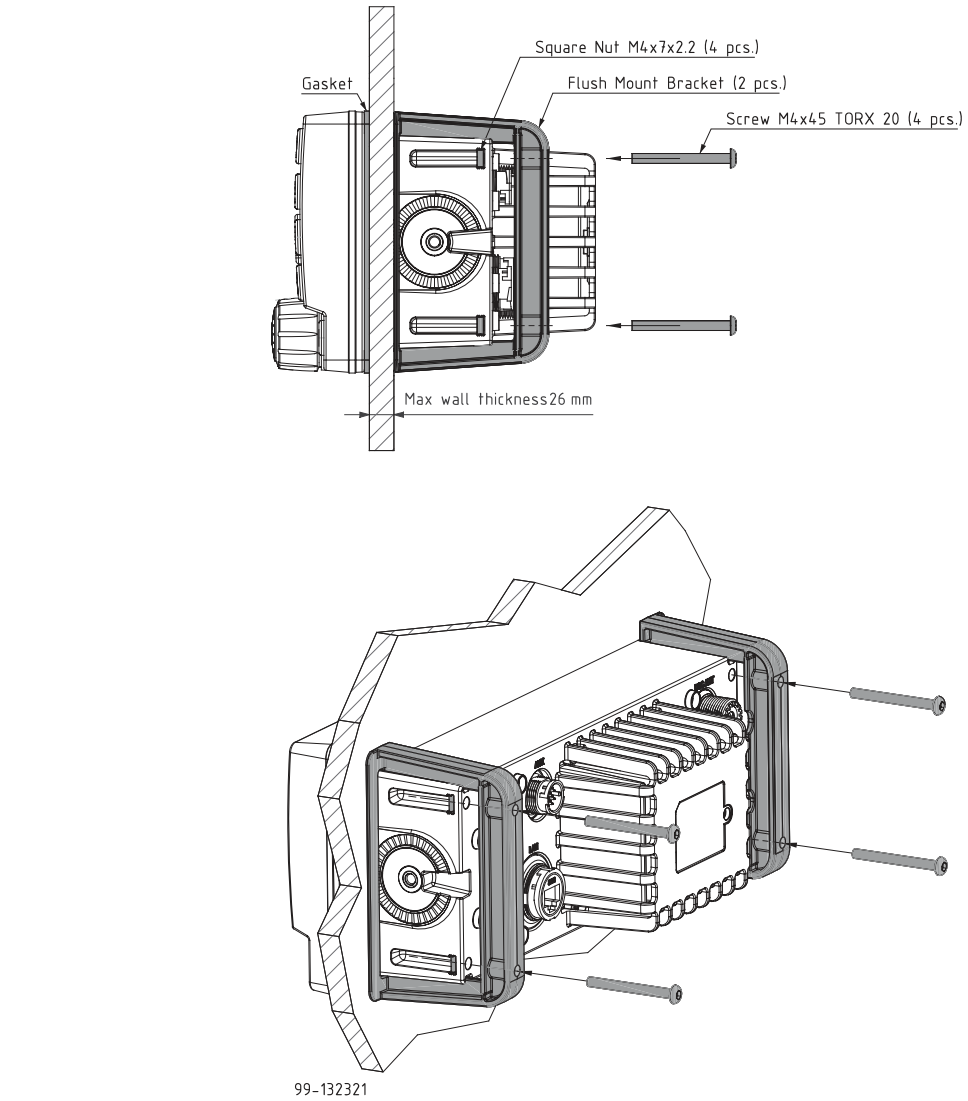

Figure 2-6: Flush mount

Note Firmly tie back and secure any wires not used to avoid the possibility for mutual shorting or shorting to ground.

2.2.3 SAILOR 6090 Power Converter

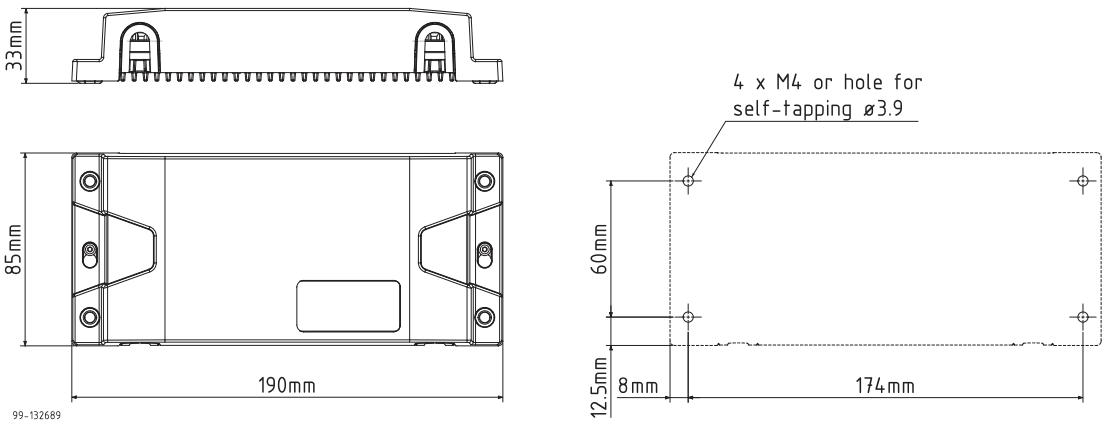

Figure 2-7: SAILOR 6090 Power Converter, dimensions

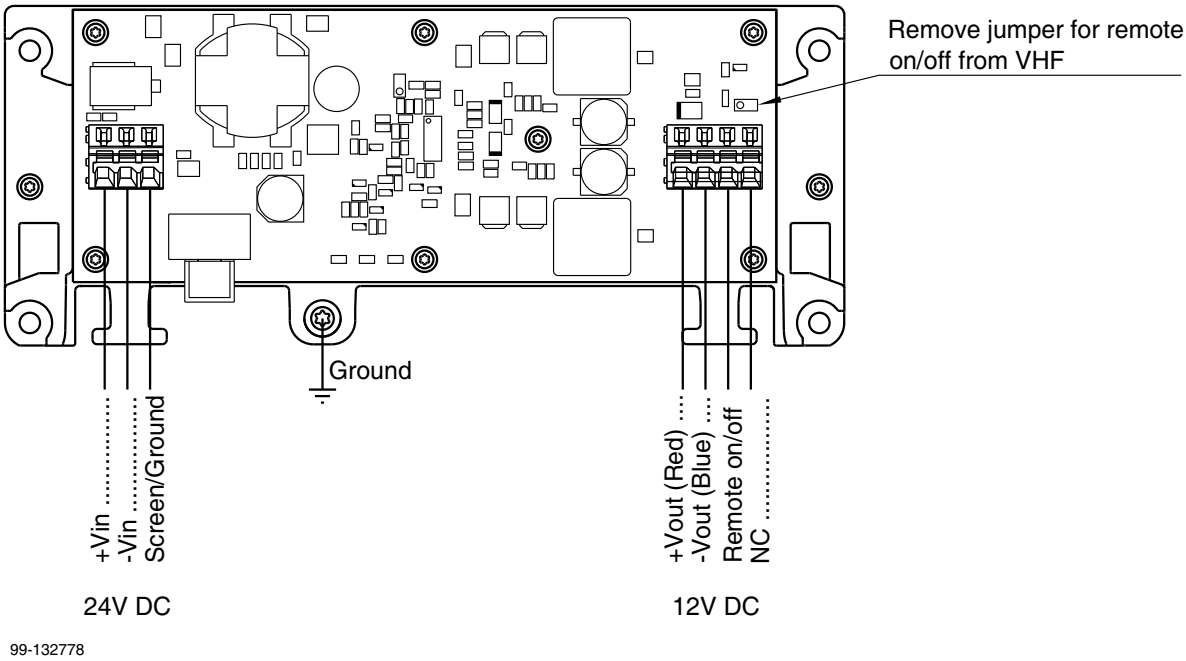

Figure 2-8: Connecting the SAILOR 6090 Power Converter

2.2.4 SAILOR 6201 Handset with cradle

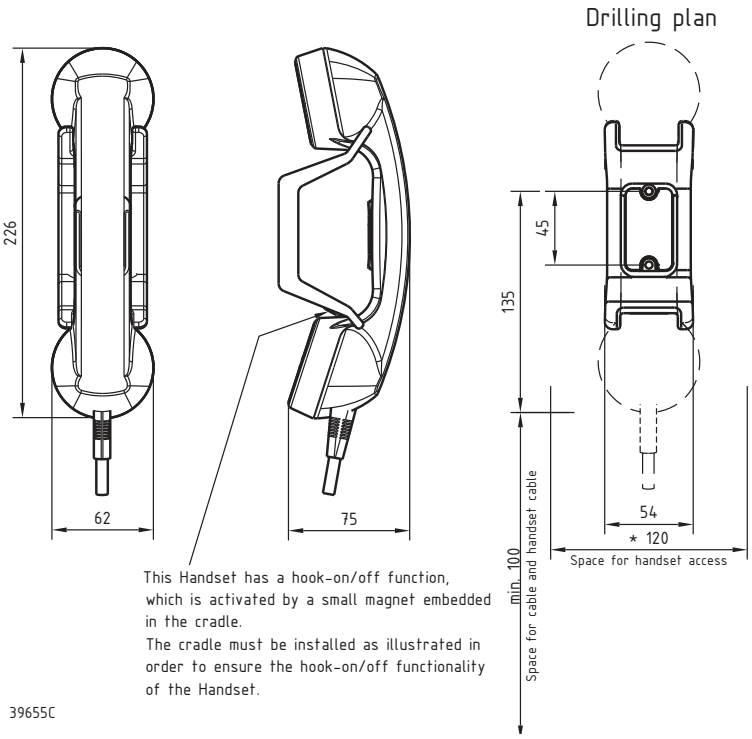

Figure 2-9: SAILOR 6201 Handset with cradle

2.3 Connectors

2.3.1 Connector at the front panel for handset or handmicrophone

Use the connector at the front of the SAILOR 6222 VHF DSC to connect a SAILOR 6201 Handset. You may also connect a waterproof SAILOR 6203 Handset or SAILOR 6202 Handmicrophone.

Connector type: Circular connector, 10pin, male.

Connection cable with plug, part number 406209-941.

Pin assignment: Connector front view on the VHF radio.

Panel lock, 10 pin male

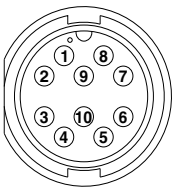

Pin	Description	Wire color
1	Not connected	Brown
2	Not connected	Blue
3	Not connected	White
4	Not connected	Green
5	Mic+	Yellow
6	Earpiece	Grey
7	Hook_PTT	Pink
8	Battery V +10.8 – 15.6 VDC	Red
9	Internal GND = - Battery	Black
10	Internal GND = - Battery	Orange – SCREEN (Drain)

Table 2-2: Pin allocation, connector at the front panel

2.3.2 Connectors at the rear panel

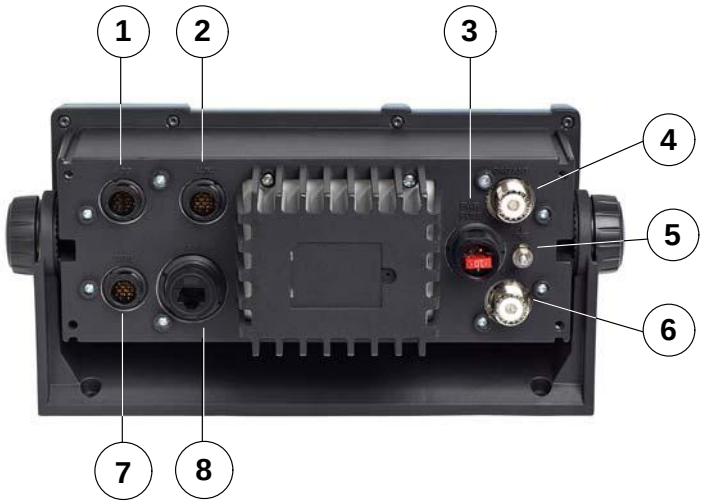

Figure 2-10: Connections at the rear panel

1. *ACC connector* for accessories
2. *AUX connector* for VDR, external speaker, alarm panels, GPS input
3. *Power connector PWR FUSE* with fuse 10 A mini ATO
4. *DSC ANT connector for DSC antenna*
5. *Ground stud for grounding*
6. *ANT connector for VHF antenna*
7. *CTRL connector*
8. *Ethernet connector: LAN*

2.3.3 ACC connector

Use the connector marked **ACC** to connect GPS and a SAILOR 6201 Handset. You may also connect a waterproof SAILOR 6203 Handset or SAILOR 6202 Handmicrophone.

Connector type: Circular connector, 10pin, male.

Connection cable with plug, part number 406209-941.

Pin assignment: Connector front view on the VHF radio.

Panel lock, 10 pin male

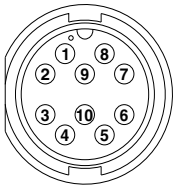

Pin	Description	Wire color
1	NMEA in+	Brown
2	NMEA in-	Blue
3	NMEA HS in -	White
4	NMEA HS in +	Green
5	Mike 2 / Line in	Yellow
6	EAR 2 / Line out	Grey
7	Hook_PTT	Pink
8	Battery supply when radio is on	Red
9	Internal GND = - Battery	Black
10	Internal GND = - Battery	Orange – SCREEN (Drain)

Table 2-3: Pin allocation, ACC connector

NMEA interface description

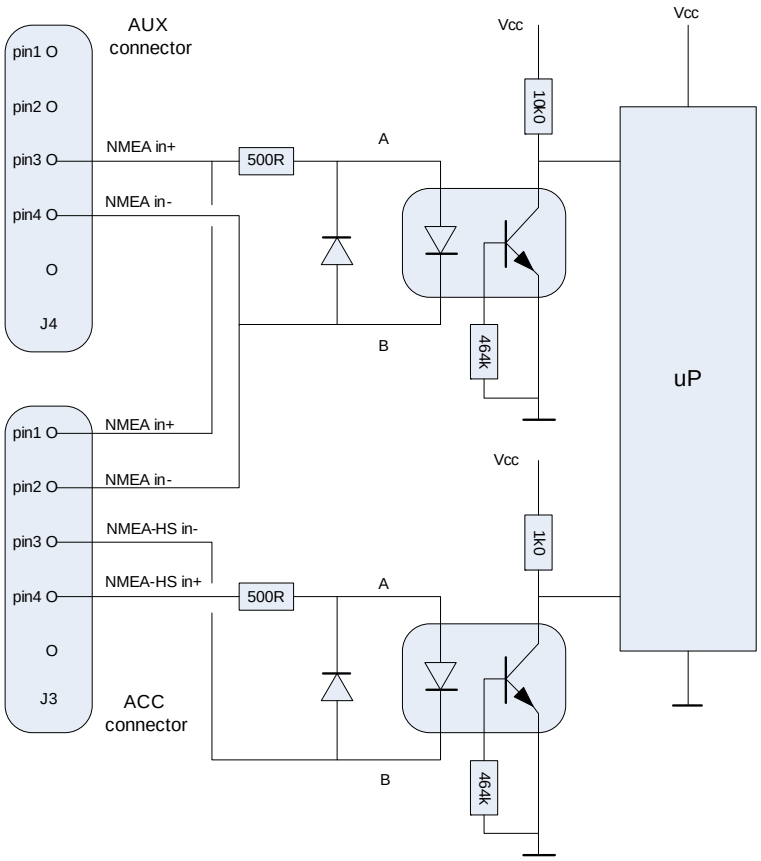

Figure 2-11: NMEA interface description

NMEA input: Impedance: 600 Ohm. Max. 2mA at min. level of 2V

The NMEA interface supports NMEA 0183 v2.0, v2.1 and v2.3. The following sentences are supported:

- GGA: UTC, "Position", "quality indicator" (indicators 1-5). All other fields are unused.
- GLL: UTC, "Position", "Status" and "mode" (indicators A and D). All other fields are unused.
- GNS: UTC, "Position" and "mode" (indicators A and D). All other fields are unused.
- RMC: UTC, "Position", "Status", "Date" and "mode" (indicators A and D). All other fields are unused.
- ZDA: UTC, "Day", "Month", and "Year". All other fields are unused.

In accordance with the standard EN61162-1:2008 and EN61162-2:1998.

2.3.4 AUX connector

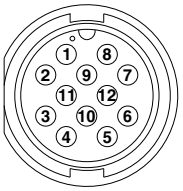

This connector is used to connect VDR, external speaker, DSC alarms and GPS input.

Connector type: Circular connector, 12pin.

Connection cable with plug, part number 406208-941.

Pin assignment: Connector front view on the VHF radio:

Pin	Description	Wire color
1	Shield (GND)	Brown
2	Lo Power Forced control	Blue
3	NMEA+ In	White
4	NMEA- In	Green
5	AUX OC	Yellow
6	DSC Call	Grey
7	DSC Alarm	Pink
8	-Battery	Red
9	External Speaker +	Black
10	External Speaker -	Orange
11	VDR+ Mixed RX/TX for record	Violet
12	VDR- Mixed RX/TX for record	Cyan

Table 2-4: Pin allocation, AUX connector

2.3.5 CTRL connector

This connector is used to connect a SAILOR 6204 Control Speaker Microphone or SAILOR 6208 Connection Box.

Connector type: Circular connector, 12pin.

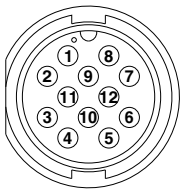

Connection cable with plug, part number 406208-941.

Pin assignment: Connector front view on the VHF radio:

Pin	Description	Wire color
1	GND for cable screen	Brown
2	Internal GND=- Battery	Blue
3	Battery supply when radio is on	White
4	Battery supply when radio is on	Green
5	CAN+	Yellow
6	CAN-	Grey
7	Internal GND = - Battery	Pink
8	On/off from Control Speaker Microphone	Red
9	RX out +	Black
10	RX out -	Orange
11	TX in +	Violet
12	TX in -	Cyan

Table 2-5: Pin allocation, CTRL connector

2.3.6 Ethernet connector: LAN

There is one Ethernet (10/100 MB) connector on the rear panel, it is marked LAN.

Connector type: RJ-45 female, shielded

Pin number	Pin function	Wire color
1	Tx+	white/orange
2	Tx-	orange
3	Rx+	white/green
4	Not connected	blue
5	Not connected	white/blue
6	Rx-	green
7	Not connected	white/brown
8	Not connected	brown

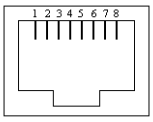

Table 2-6: Pin allocation, LAN connector

2.3.7 Power connector PWR FUSE

The DC Power input connects to a DC supply with 12 DC nominal (10.8 to 15,6 V DC). The connector has a 10 A fuse. The interface also has a “remote on/off” function for a remote 24 V – 12 V DC Power Converter.

Connector type: LTW Power
Fuse: 10 A mini ATO

To help extract the fuse you can order a fuse puller in the **ESHOP** at http://extranet.thrane.com/.

Pin-out

The figure and table below show the connector outline, pin assignments and wire color in the power cable delivered with the SAILOR 6222 VHF DSC.

Pin	Pin function	Wire color
1	DC+ (10.8 - 15,6 V DC)	Red
2	DC- (0 V DC)	Blue
3	Remote on/off	Yellow

Table 2-7: Pin allocation, power

Connecting DC power

- Connect DC+ (red wire) to DC out + from your DC supply.
- Connect DC- (blue wire) to DC out - from your DC supply.

Connect the yellow wire in the power cable to use the Remote on/off function.

2.3.8 DSC ANT connector for DSC antenna

Use the connector marked **DSC ANT** on the rear panel to connect the DSC antenna to the radio with a 50 Ohm coaxial cable with low loss, e.g. RG214. Install a PL259 plug at the cable end.

Place the antenna as high and clear of obstructions as possible. Make sure that the horizontal distance to metal parts is minimum 1.5 m (5 ft.).

Connector type: female SO239 for PL259 plug.

For more information about DSC antenna installation see *VHF and DSC antenna installation* on page 2-18

2.3.9 ANT connector for VHF antenna

Use the connector marked **ANT** to connect the VHF antenna to the radio with a 50 Ohm coaxial cable with low loss, e.g. RG214. Install a PL259 plug at the cable end.

Place the antenna as high and clear of obstructions as possible. Make sure that the horizontal distance to metal parts is minimum 1.5 m (5 ft.).

Connector type: female SO239 for PL259 plug.

For more information about VHF antenna installation see *VHF and DSC antenna installation* on page 2-18.

2.3.10 Ground stud for grounding

Important You must connect the Ground stud to ship ground.

The ground stud is located on the rear panel and is used to connect a ground wire for grounding the SAILOR 6222 VHF DSC. To connect the SAILOR 6222 VHF DSC to ship ground, do as follows:

1. Connect a ground cable of > 1 m length and > 4 mm^2 cross section to the Ground stud located between the DSC ANT and ANT connector and fasten it with the wing nut.
2. Connect the other end of the cable to ship ground. Make the cable as short as possible.

2.4 VHF and DSC antenna installation

The SAILOR 6222 VHF DSC must be installed with one antenna for VHF RX/TX communication and one antenna for DSC communication. You can install all commonly available 50 Ohm antennas covering the appropriate frequency range and providing a VSWR less than 1.5 over this range.

For further details on equipment and antenna installation, see IMOCOMSAR/Circ. 32, GUIDELINES FOR THE HARMONIZATION OF GMDSS REQUIREMENTS FOR RADIO INSTALLATIONS ON BOARD SOLAS SHIPS.

2.4.1 Cable requirements

Connect the antennas using a low loss type 50 Ohm coaxial cable, e.g. good quality RG214 or better. IMO-COMSAR/Circ. 32 recommends the use of a double screened type cable (like e.g. RG214) with a maximum insertion loss of 3dB across the antenna cable installation.

The maximum antenna cable length in the installation depends on the quality of the cable, i.e. the specified attenuation (dB/m) of the cable of choice at the high end of the VHF frequency band. As a rule of thumb the cable length using e.g. RG214 coaxial cable should not exceed 25 m.

2.4.2 VHF RX/TX antenna

In installations with two or more VHF radios it is important to ensure the optimum performance of these by carefully selecting the antenna positions for both radios. It is recommended to maximize the RF attenuation between the VHF RX/TX antennas in the installation. You can ensure this by not having the RX/TX antennas positioned at the same horizontal level, i.e. the RX/TX antennas for each radio must be installed at shifted elevations as shown in the following drawing.

If sufficient vertical distance between two or more such antennas cannot be achieved, the horizontal distance between them is increasingly important for optimum performance. If there is hardly any vertical separation ensure that there is a minimum of 5 m horizontal distance between any RX/TX antennas in the installation.

To minimize any increase in VSWR of the VHF RX/TX antenna, install the antenna at a vertical distance of at least 2 m to any other mast, pole or other RF antennas. Keep VHF

antennas as far away as possible from antenna main beam of any radar and satellite equipment.

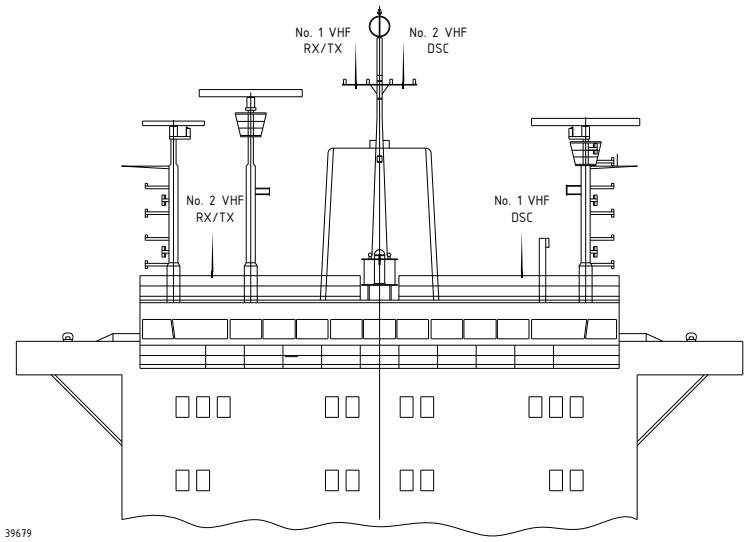

Figure 2-12: Antenna positioning 1/2

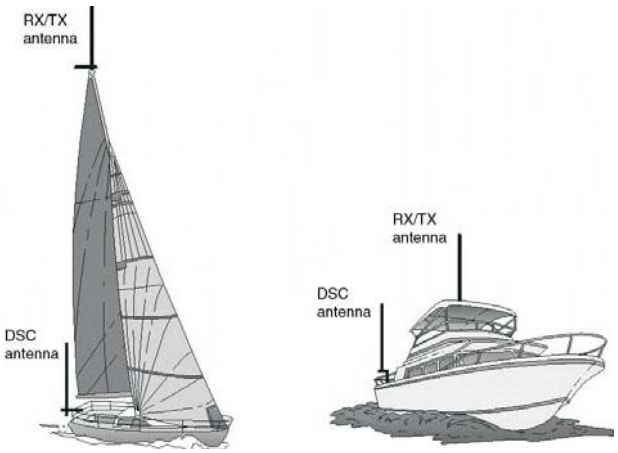

Figure 2-13: Antenna positioning, 2/2

2.4.3 DSC antenna

The positioning of the DSC antennas is less critical in terms of the imposed VSWR and due to the nature of the DSC signalling. Please note that the DSC receiver of a VHF radio is likely to be temporarily blocked in reception due to high signal blocking, if the DSC antenna is installed close to a transmitting RX/TX antenna at the same horizontal level.

2.5 Accessories

2.5.1 Part numbers for accessories

The following accessories are available for the SAILOR 6222 VHF DSC:

Part number	Accessories available
406201A	SAILOR 6201 Handset with cradle (additional)
406202A	SAILOR 6202 Hand Microphone
406203A	SAILOR 6203 Handset Waterproof
406204A	SAILOR 6204 Control Speaker Microphone
406207A	SAILOR 6207 Connection Box with Cable 406209-941
406208A	SAILOR 6208 Connection Box with Cable 406208-941
406209-940	Connection Cable for bulkhead mount, 5 m, 1-x10 pole
406209-941	Connection Cable, 5 m, 1x10 pole
406204-940	Cable for SAILOR 6204 Control Speaker Microphone
406270A	SAILOR 6270 Loudspeaker
406103A	SAILOR 6103 GMDSS Alarm Panel
406197A	SAILOR 6197 Ethernet Switch
406090A	SAILOR 6090 Power Converter 24 V – 12 V

Table 2-8: Part numbers for accessories

2.5.2 Connection box SAILOR 6207

The **SAILOR 6207 Connection Box** is used to connect GPS (NMEA), GPS/AIS DSC modem and further SAILOR 6201 Handsets. For wiring and cabling details see *System configuration examples* on page B-1 and *Cable requirements* on page B-18.

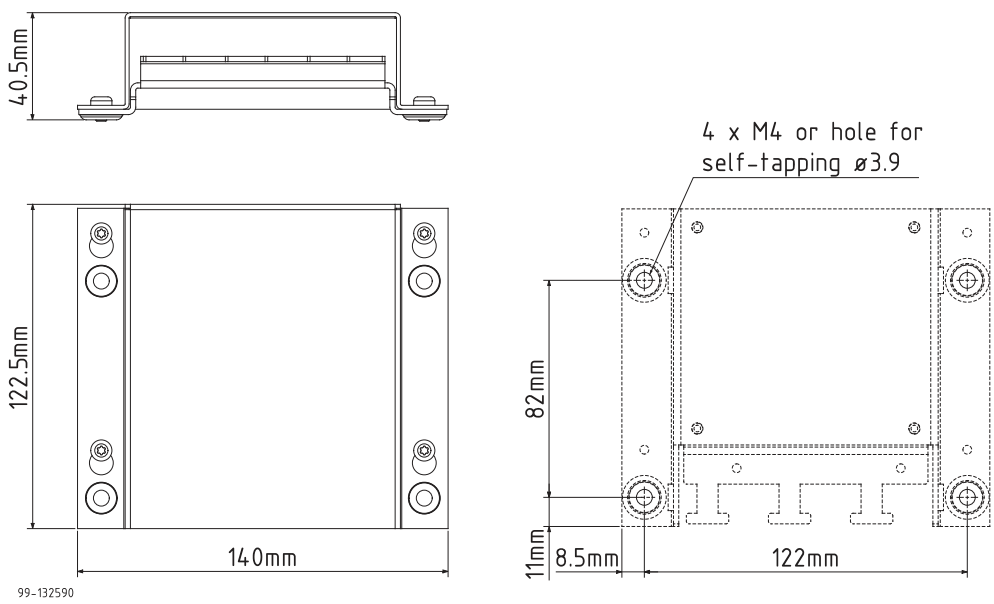

Figure 2-14: SAILOR 6207 Connection Box for parallel handsets, mounting

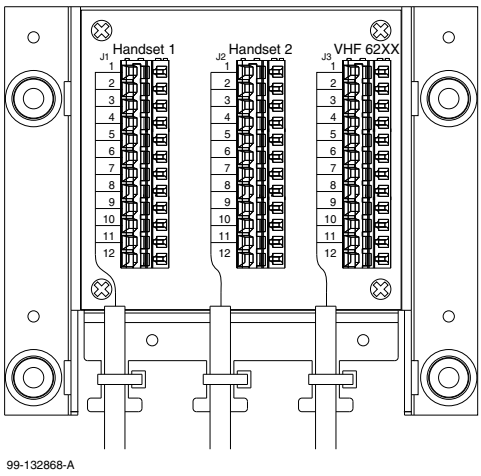

Description	Pin	Wire color
NMEA in+	1	Brown
NMEA in-	2	Blue
NMEA HS in-	3	White
NMEA HS in+	4	Green
Mike 2 / Line in	5	Yellow
Ear 2 / Line out	6	Grey
Hook_PTT	7	Pink
Bat_SW Supply voltage when on	8	Red
Internal GND = - Battery	9	Black
Internal GND = - Battery	10	Orange
Internal GND = - Battery	11	SCREEN (Drain)
	12	NC

Cable part no. 406209-941

Figure 2-15: SAILOR 6207 Connection Box for parallel handsets, wiring

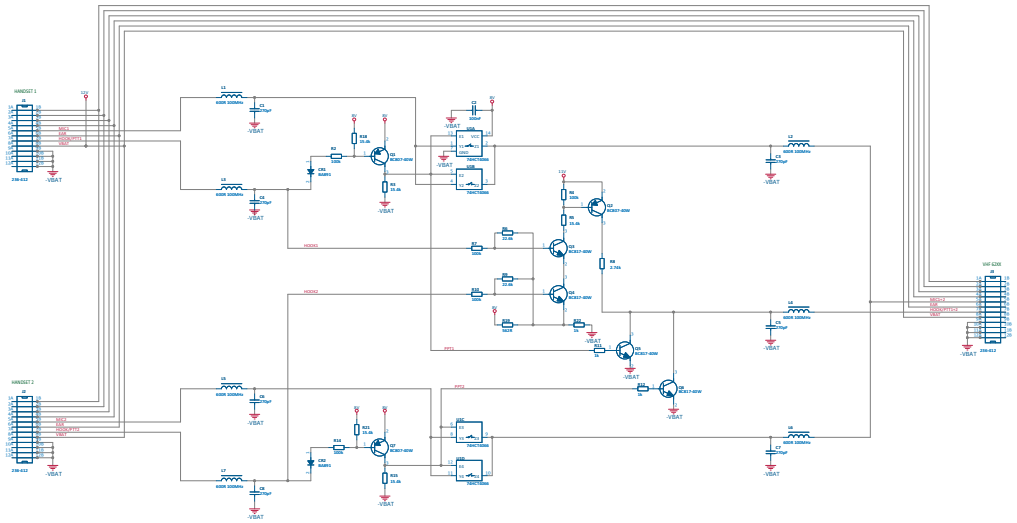

Figure 2-16: SAILOR 6207 Connection Box for parallel handsets, diagram

2.5.3 Connection box SAILOR 6208

The **SAILOR 6208 Connection Box** is used to connect SAILOR 6204 Control Speaker microphones and other auxiliary equipment. For wiring and cabling details see *System configuration examples* on page B-1 and *Cable requirements* on page B-18.

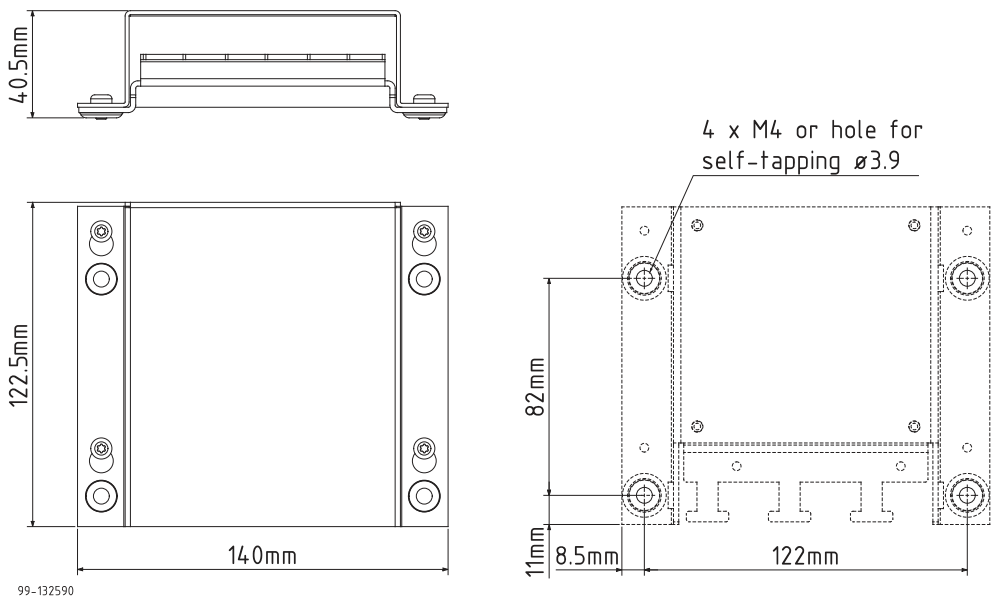

Figure 2-17: SAILOR 6208 Control Unit Connection Box, mounting

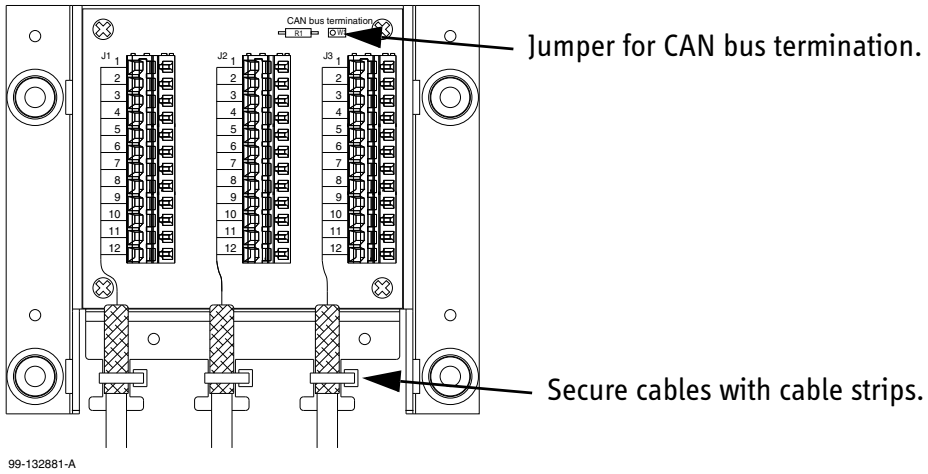

Figure 2-18: SAILOR 6208 Control Unit Connection Box for parallel handsets, wiring

Terminate the last SAILOR 6208 on the CAN bus (furthest away from the transceiver).

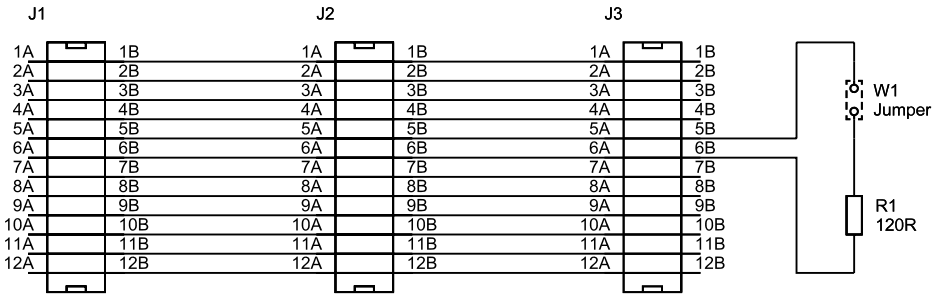

Figure 2-19: SAILOR 6208 Control Unit Connection Box, diagram

First-time power up

3.1 General use and navigation

The tasks needed to be performed during installation are described below. See the SAILOR 6222 VHF DSC User manual for instructions how to operate and set up the VHF radio.

3.1.1 Power on and volume in handset and speaker

The VHF radio has a dual-function on/off wheel knob for power on/off and volume control.

- To power on the VHF radio press the on/off wheel knob.
- To power off the VHF radio, press and hold the on/off wheel knob and follow the instructions in the display.
- To adjust the speaker volume, turn the volume wheel knob (clockwise = louder, counter clockwise = softer, until muted). When muted, is shown in the display.
- To adjust the volume of the handset earpiece see the SAILOR 6222 VHF DSC *User manual*.

3.1.2 Working channel and changing settings

Use the **selector wheel knob** to browse and select:

- To browse and select **settings**, turn the selector wheel knob and press for accept.
- To select a **working channel** use the selector wheel knob or enter the channel number using the keypad.

3.2 Entering the MMSI number

When the VHF radio is powered on for the first time, you must enter the vessel's MMSI number. Hereafter the MMSI number is briefly displayed after power up. The MMSI is a unique, 9-digit identifier assigned to your ship.

Important The MMSI number must be programmed into the VHF radio to use any DSC functionality. The radio will prompt for the MMSI number at each power-up until the MMSI has been entered. An error message is displayed when trying to initiate any DSC function. However, you can use the radio in normal VHF mode.

CAUTION! Without a programmed MMSI number the Distress button will not work!

3.2.1 Entering the MMSI number

When being prompted after power up enter the MMSI number as described below:

1. Enter the 9 digits one by one using the keypad or by turning the selector wheel knob to the desired digit, press the selector wheel knob to accept the digit and advance to the next digit.
2. If you need to delete the previous digit press the soft key **BACK**.

Note The MMSI number can be programmed by the operator once. If a wrong number has been entered and stored, or if there is a requirement to change it, contact your authorized dealer.

Once programmed, the MMSI number is displayed in the DSC window directly after start-up. The DSC functionality is operational at any time.

The message **NO DSC (NO MMSI)** is shown in the DSC window if the MMSI is not programmed.

3.2.2 Changing the MMSI number

If you need to change the MMSI number of the SAILOR 6222 VHF DSC use the service tool. You can download the service tool from http://extranet.thrane.com.

Service & maintenance

4.1 Contact for support

Contact your authorized dealer for technical service and support of the VHF radio. Before contacting your authorized dealer you can go through the troubleshooting guide to solve some of the most common operational problems.

4.2 Maintenance

4.2.1 Preventive maintenance

Maintenance of the SAILOR 6222 VHF DSC can be reduced to a maintenance check at each visit of the service staff. Inspect the radio for mechanical damages, salt deposits, corrosion and any foreign material. Due to its robust construction and ruggedness the radio has a long lifetime. Anyway it must carefully be checked at intervals not longer than 12 months - dependent on the current working conditions.

Salt deposits

In case the equipment has been exposed to sea water there is a risk of salt crystallization on the keys and wheel knobs and they may become inoperable. Clean the VHF radio and speaker microphones with fresh water.

4.2.2 Error messages and warnings

Errors and warning messages are shown in the display and are read-only.

4.2.3 DSC self test

To run a control routine DSC self test, do as follows:

1. Press the soft key **SETUP**. If it is not in the display, press the soft key **MORE** until **SETUP** appears.
2. Press the arrow soft key ▶ or ◀ to advance to **DSC SETUP**.
3. Turn the selector wheel knob to select **DSC Self Test**. Press and turn the selector wheel knob to select **RUN**.
   The test will check the ability to encode/decode DSC signalling on RF level. The radio will automatically transmit a DSC safety test call to its own MMSI number

without enabling the transmitter power amplifier. In parallel the radio decodes and compares the received call to be the same as the transmitted.

The display shows the result of the test.

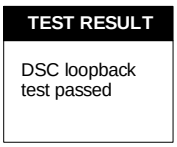

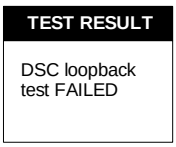

4. Press the soft key **OK** to acknowledge the test result and resume normal operation.

Important

If the DSC loopback test fails, this indicates the DSC functionality does not work correctly – including the ability to send a DISTRESS message.

Contact your dealer immediately for further advice.

4.3 Troubleshooting guide

Action	Symptom	Remedy
The radio will not turn on	The display is empty.	Check if power is present. Check fuse which is placed in the power connector. Check performance of power supply if connected to one.
No commu-nication	The loudspeak er is mute.	Check the antenna installation. Check antenna cable. Check handset/Handmicrophone and cable.
GPS	Position requested.	If the VHF, despite being connected to a GPS/position source, prompts for entering the position and time information, the automated update has most likely been lost either due to missing data on the line, broken cabling or the GPS/position source has failed. Refer to the installation section in the back of this manual for installation and connection details. Until the automatic position update from GPS/position source is restored position and time must be entered manually when prompted by a (four hour) timer in VHF. In the **DSC SETUP**, **Position Info**, you can verity the position data. If data is present Lat/Lon/UTC will be displayed.
DSC routine testing		Check the DSC function regularly. Verify the complete DSC installation, with antennas, by transmitting a Safety Test call to another station (coast or ship). The test call is generated using the DSC call flow via menu CALL. The call should normally be replied by the receiving station without questioning. The default configuration of a DSC VHF radio is auto-acknowledgement of any received Safety test call requests. If a ship is equipped with multiple radios a second radio can be the station to check up against. The transmitting radio will not receive its own transmitted calls. If there is only a single radio on a vessel, a facility is built into the unit where the DSC engine can be verified using a test call that is internally looped without activating the radio transmitter PA. The test is executed via menu SETUP, DSC SETUP. The call sequence that is verified, is an Individual Safety Test Call directed to own MMSI. The test status is read in the display.
Missing MMSI	DSC operation is not working	When powering up the VHF for the first time after leaving factory there is no MMSI number in the VHF radio. For the DSC operation to function the MMSI number must be entered in the VHF radio. For further details see *Entering the MMSI number* on page 3-2.

Table 4-1: Troubleshooting guide

Action	Symptom	Remedy
Radio time	DSC logs are sorted with wrong time stamp or radio time is incorrect	A wrong radio time indication should occur only if GPS position source is not connected or providing correct time data. A valid GPS time signal will update the UTC time used for time stamping the DSC logs. If a GPS/position source is not connected to the VHF radio and hence position and time is entered manually, you must enter the "radio time" also manually, at least after power up. This will ensure correct time stamping of the DSC logs. The UTC time is the suggested time to be entered when prompted for entering position and time manually (every four hours).
DSC Channel not free	DSC transmissi on delayed	The transmission of a DSC call which is not of category distress will be postponed if the VHF radio is in the process of decoding an incoming DSC call. As soon as this decoding process has finalized the transmission will take place.
Handset configuration	No sound in earpiece	The earpiece volume may be configured to OFF. See section *Controller setup in the user manual* on how to adjust the earpiece volume of the handset.
Device failure		If any of the checks and tests described in this section do not assist in resolving the difficulties experienced in the operation and/or performance of the VHF installation, a fault may have developed in the VHF radio itself. When contacting an authorized Thrane & Thrane representative be sure to provide as much information as possible describing the observed behavior - also including the type of the VHF radio, its serial number, and software release version (both found in the setup menu Controller Setup).

Table 4-1: Troubleshooting guide (Continued)

4.3.1 Replacing the fuse in the power connector

One fuse is installed in the power connector. If the fuse is blown, do as follows:

1. Track down why the fuse was blown and solve the problem.
2. Take out the old fuse.
3. Insert the new fuse. The fuse rating is 10 A T.

Figure 4-1: Fuse in the power connector

4.3.2 Replacing the fuse in the SAILOR 6290 Power Converter

One fuse is installed in the SAILOR 6290 Power Converter. If the fuse is blown, do as follows:

1. Track down why the fuse was blown and solve the problem.
2. Take out the old fuse.
3. Insert the new fuse. The fuse rating is 10 A T.

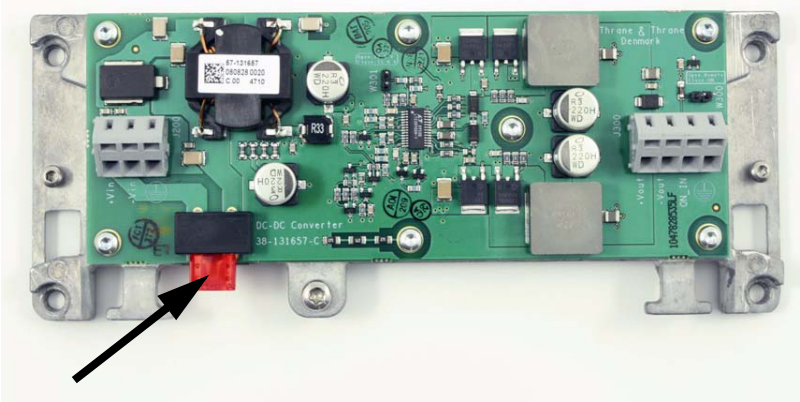

Figure 4-2: Fuse in the SAILOR 6090 Power Converter

4.4 Warranty and returning units for repair

Should your SAILOR/EXPLORER/Thrane & Thrane product fail, please contact your dealer or installer, or the nearest Thrane & Thrane partner. You will find the partner details on www.thrane.com where you also find the Thrane & Thrane Self Service Center web-portal, which may help you solving the problem.

Your dealer, installer or Thrane & Thrane partner will assist you whether the need is user training, technical support, PIN-codes, arranging on-site repair or sending the product for repair.

Your dealer, installer or Thrane & Thrane partner will also take care of any warranty issue.

4.4.1 Repacking for shipment

Should you need to send the product for repair, please read the below information before packing the product.

The shipping carton has been carefully designed to protect the SAILOR 6222 VHF DSC and its accessories during shipment. This carton and its associated packing material should be used when repacking for shipment. Attach a tag indicating the type of service required, return address, part number and full serial number. Mark the carton FRAGILE to ensure careful handling.

Note Correct shipment is the customer's own responsibility.

If the original shipping carton is not available, the following general instructions should be used for repacking with commercially available material.

1. Wrap the defective unit in heavy paper or plastic. Attach a tag indicating the type of service required, return address, part number and full serial number.
2. Use a strong shipping container, e.g. a double walled carton of 160 kg test material.
3. Protect the front- and rear panel with cardboard and insert a 7 cm to 10 cm layer of shock-absorbing material between all surfaces of the equipment and the sides of the container.
4. Seal the shipping container securely.
5. Mark the shipping container FRAGILE to ensure careful handling.

Failure to do so may invalidate the warranty.

Technical specifications

A.1 Transceiver unit SAILOR 6222 VHF DSC

Item	Specification
Weight SAILOR 6222 VHF DSC	< 1.50 kg (3.3 lbs) approximately
Box weight SAILOR 6222 VHF DSC	3.8 kg (8.4 lbs) approximately, including SAILOR 6201 Handset and wall mount cradle, SAILOR 6090 Power Converter and Installation and user manual in box.
Dimensions	**Height**: Outer dimension 107 mm, hole height for flush mount 89 mm **Width**: Outer dimension 241 mm, hole width for flush mount 227 mm **Depth**: Outer dimension from front of wheel knobs 132 mm, depth for flush mount 94 mm
Operating temperature	-25°C to 55°C (5°F to 131°F)
Storage temperature	-30°C to 80°C (-22°F to 176°F)
Power supply	12 VDC Nominal (10,8– 15,6 VDC)
Current consumption	Max. 7 A
Current consumption at 12 VDC without any accessories connected	RX: 0.5 A TX: 5 A
Current consumption at 12 VDC with all accessories connected	RX: 0.7 A TX: 7 A
Frequency range	TX: 156,000 MHz – 157,425 MHz, RX: 156,000 MHz – 163.425 MHz

Table A-1: SAILOR 6222 VHF DSC, technical specifications, part 1

Item	Specification
Channel spacing	12,5 kHz and 25 kHz, all international maritime channels
Number of P channels	The radio may be programmed with up to 100 private channels that can be managed in all channel modes.
Modulation 25 kHz 12.5 kHz	 16K0G3E, 16K0G2B (DSC) 8K05G3E
Antenna	50 Ohm antenna, 50 Ohm female SO239 for PL259 plug 2-antenna operation for VHF and DSC communication
Water ingress	IPx8 and IPx6 all over. For flush-mount installations a sealing gasket is included in the delivery.
Transmitter	
Transmit power	Hi/Lo: 25 W and 1 W
RF output power	High: 25 W +0 dB / - 1.5 dB Low: 1 W +0 dB / - 1.5 dB
RF output power, Canada	High: 21 W ±0.75 dB Low: 0.8 W ±0.75 dB
Frequency error	Below 500 Hz
Adjacent channel power	Below 75 dB
Conducted spurious emission	Below 0.25 µW
Distortion	Below 3%
S/N ratio	Better than 46 dB
Receiver	
Sensitivity	< -119 dBm typically @ 20 dB SINAD CCITT weighted
LF power	Built-in loudspeaker: 6 W (at 5 kHz dev./1 kHz tone) External loudspeaker: 6 W / 8 Ohm
Distortion	Below 5%
S/N ratio	Better than 43 dB
Spurious emissions	Below 2 nW

Table A-2: SAILOR 6222 VHF DSC, technical specifications, part 2

Item	Specification
Spurious response rejection	More than 74 dB
Intermodulation response	More than 73 dB
Co-channel rejection	Better than –10 dB
Adjacent channel selectivity	More than 74 dB
Blocking level	More than 94 dBµV

Table A-2: SAILOR 6222 VHF DSC, technical specifications, part 2 (Continued)

A.2 General DSC specifications

Item	Description
DSC operation	According to Rec. ITU-R M.541-9 and Rec. ITU-R M.689-2, EN 300338-2
DSC protocol	According to Rec. ITU-R M.493-13 - Class A
Navigator interface	According to IEC 61162-1 GLL, RMC, ZDA, GGA, VTG, GNS
Symbol error rate	Below $1x10^{-2}$ –113 dBm or 0.20 µV p.d.
Modulation	1700 Hz ± 400 Hz. 1200 baud
Frequency error	Below ± 1 Hz
Residual modulation	Below –26 dB

Table A-3: General DSC specifications

A.3 NMEA data rates and formats

Item	Value
61162-1	4800,8,n,1
61162-2	38400,8,n,1

Table A-4: NMEA data rates and formats

A.4 SAILOR 6090 Power Converter 24–12 V

Item	Description
Weight	300 g
Dimensions	Height: 33 mm Width: 190 mm Depth: 85 mm
Operating temperature	-25°C to 55°C (5°F to 131°F)
Storage temperature	+70°C (158°F)
Input voltage	21–32 VDC
Output voltage	12.5 VDC
Output current (max.)	8 A

Table A-5: SAILOR 6090, technical specifications

System configurations

This appendix lists selected examples of system configurations.

Note For installation of the connection boxes see *Connection box SAILOR 6207* on page 2-21 and *Connection box SAILOR 6208* on page 2-23.

You find an overview and specifications of the cables needed in *Cable requirements* on page B-18.

B.1 System configuration examples

The following list shows system configurations, with additional handsets, alarm panels, connection boxes and cable information.

The following system configurations are shown in detail:

1. *How to connect a SAILOR 6090 Power Converter*
2. *How to connect a SAILOR N163S AC Power Supply*
3. *How to connect an N420 DC Power Supply*
4. *How to install an extra SAILOR 6201, GPS, ext. loudspeaker and alarms*
5. *How to install a GPS and SAILOR 6270 External loudspeaker*
6. *How to install 2 extra SAILOR 6201 Handsets and a GPS*
7. *How to install an extra Handset SAILOR 6201 in SAILOR 6207*
8. *How to install a SAILOR 6202 Handmicrophone, an extra SAILOR 6201 and a GPS*
9. *How to install a GPS to the ACC port with a SAILOR 6208 Connection Box*
10. *How to install a GPS to the ACC port using a SAILOR 6207 Connection Box*
11. *How to install a CAN bus with a SAILOR 6204 CSM close to the VHF radio*
12. *How to install a CAN bus with a SAILOR 6204 CSM not close to the VHF radio*
13. *How to install a CAN bus with a SAILOR 6204 CSM far from the VHF radio*
14. *How to install a CAN bus with 2 SAILOR 6204 CSMs close to the VHF radio*
15. *How to install a CAN bus with 2 SAILOR 6204 CSMs far from the VHF radio*
16. *How to install a CAN bus with 2 SAILOR 6204 CSMs close to each other*

B.1.1 How to connect a SAILOR 6090 Power Converter

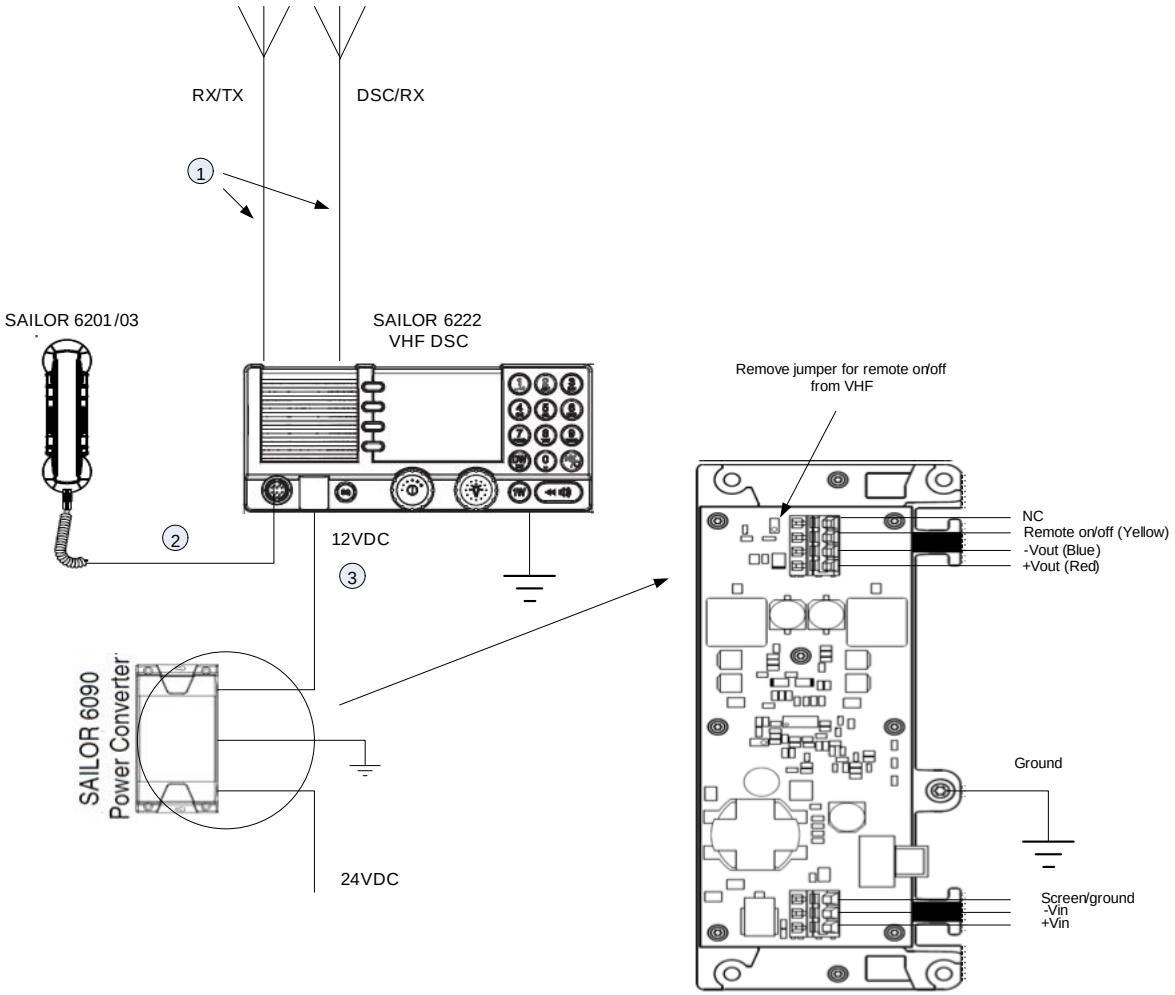

Figure B-1: System configuration, SAILOR 6090 Power Converter

B.1.2 How to connect a SAILOR N163S AC Power Supply

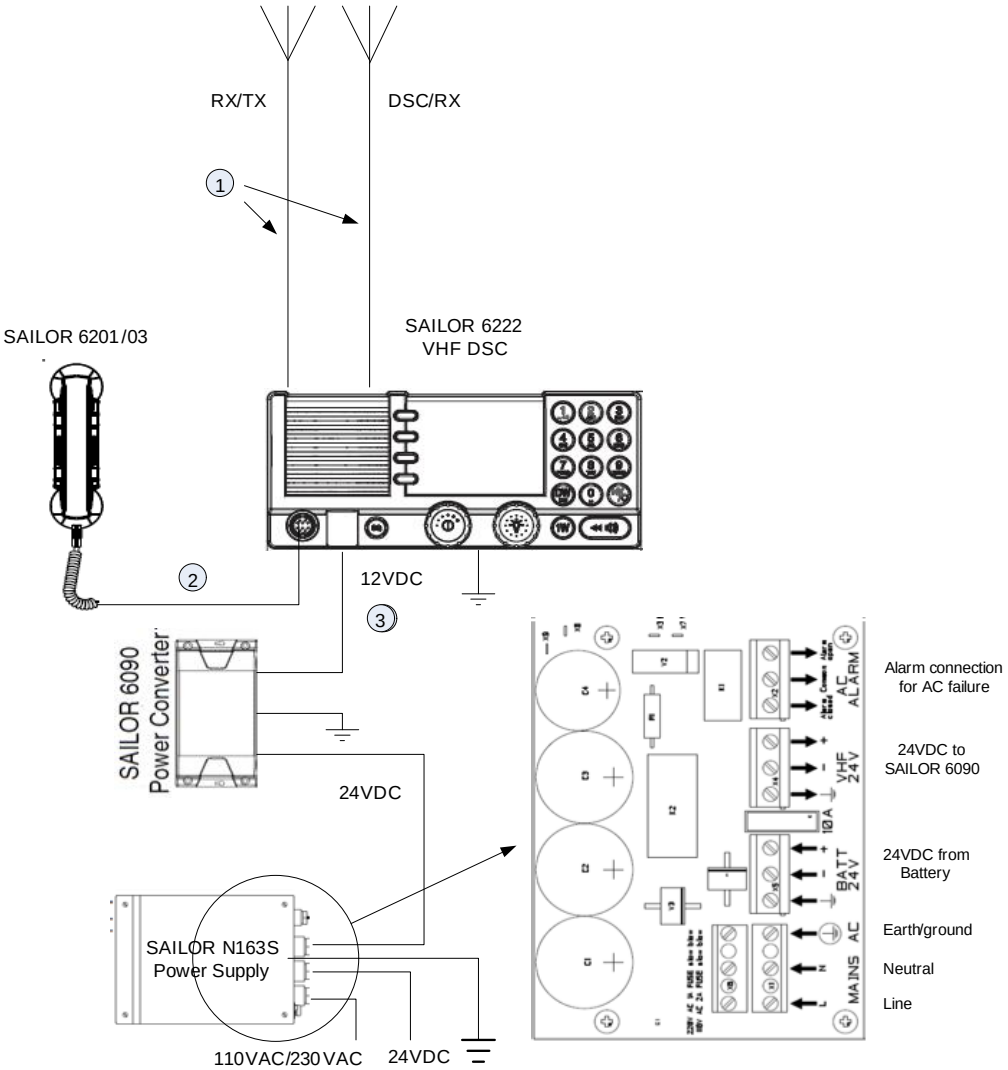

Figure B-2: System configuration, SAILOR N163S Power Supply

B.1.3 How to connect an N420 DC Power Supply

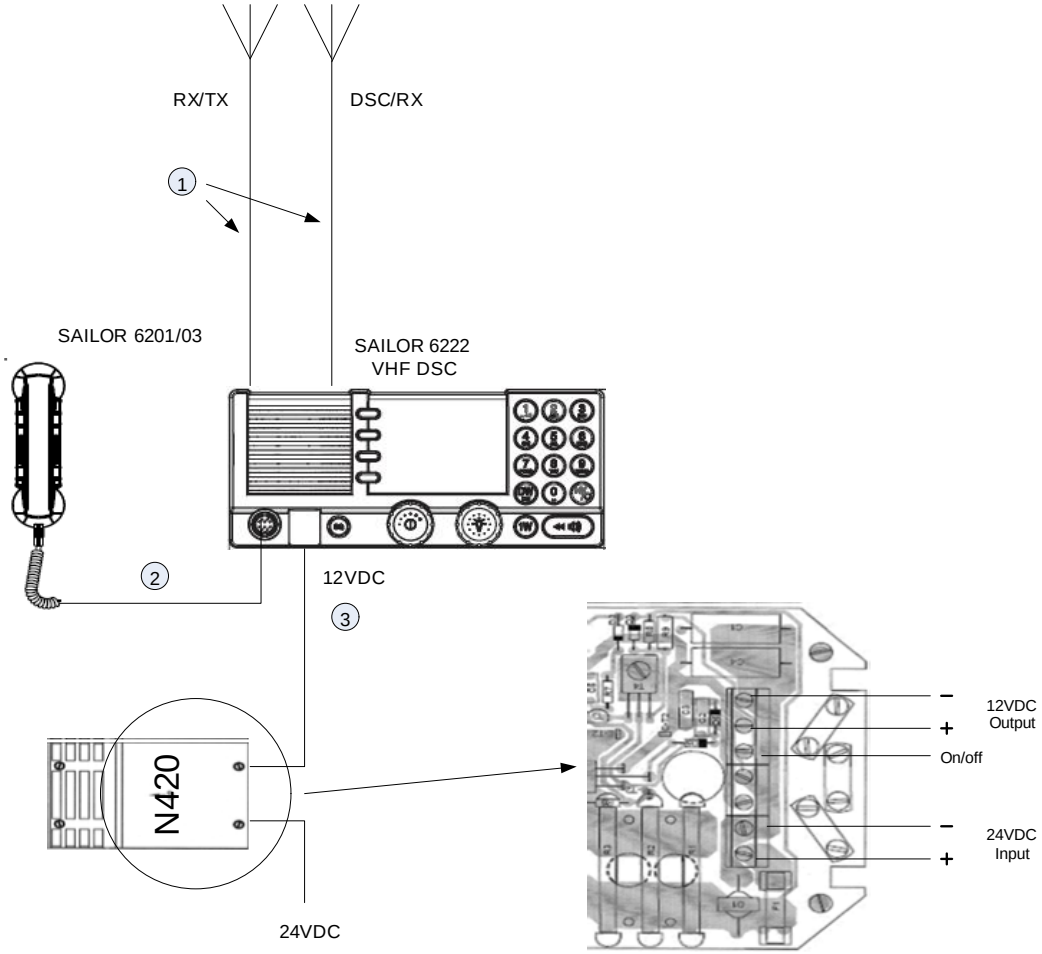

Figure B-3: System configuration, SAILOR 6201 Handset and N420 DC Power Supply

B.1.4 How to install an extra SAILOR 6201, GPS, ext. loudspeaker and alarms

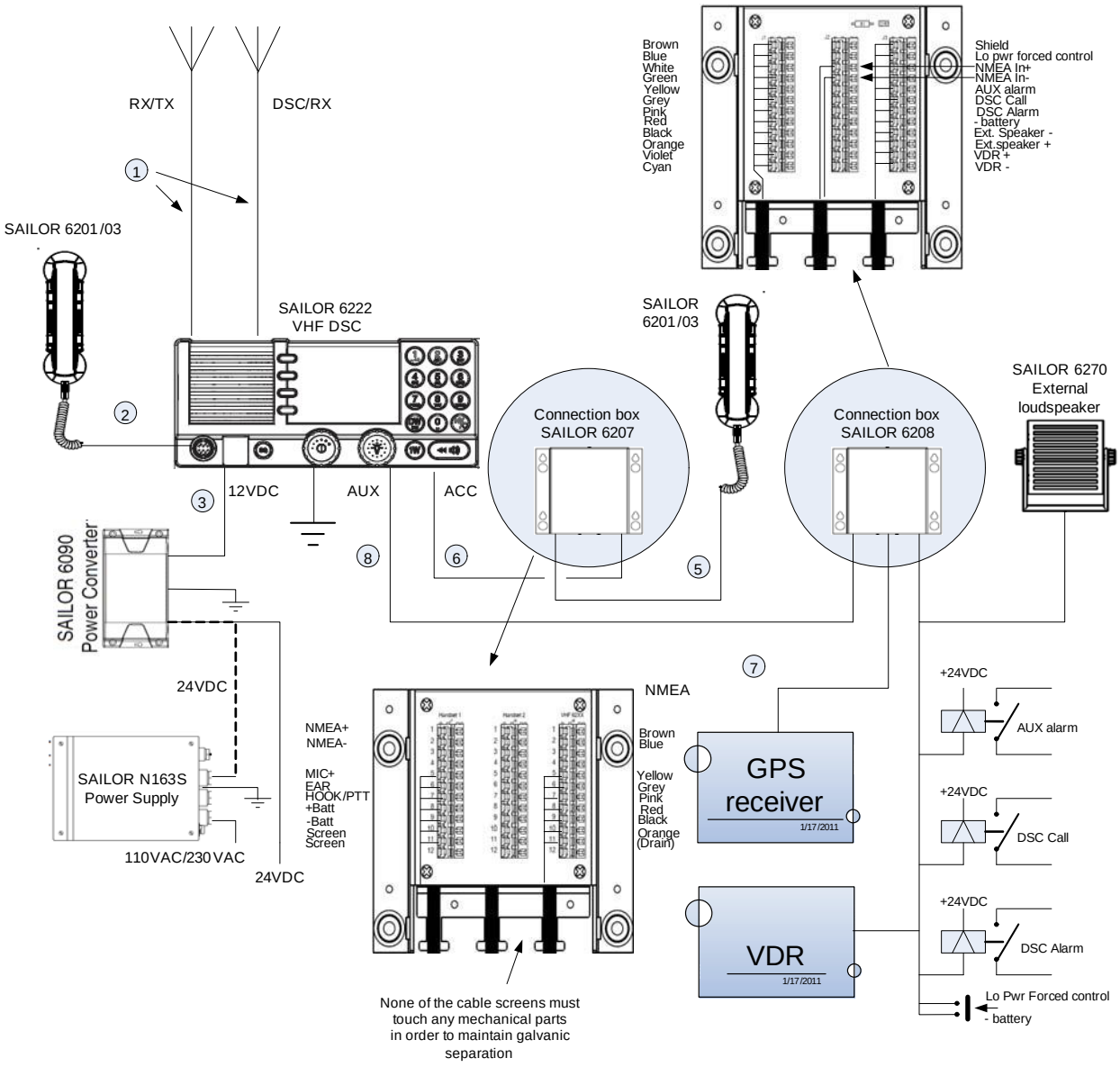

Figure B-4: System configuration, SAILOR 6201, GPS, ext. loudspeaker and alarms

B.1.5 How to install a GPS and SAILOR 6270 External loudspeaker

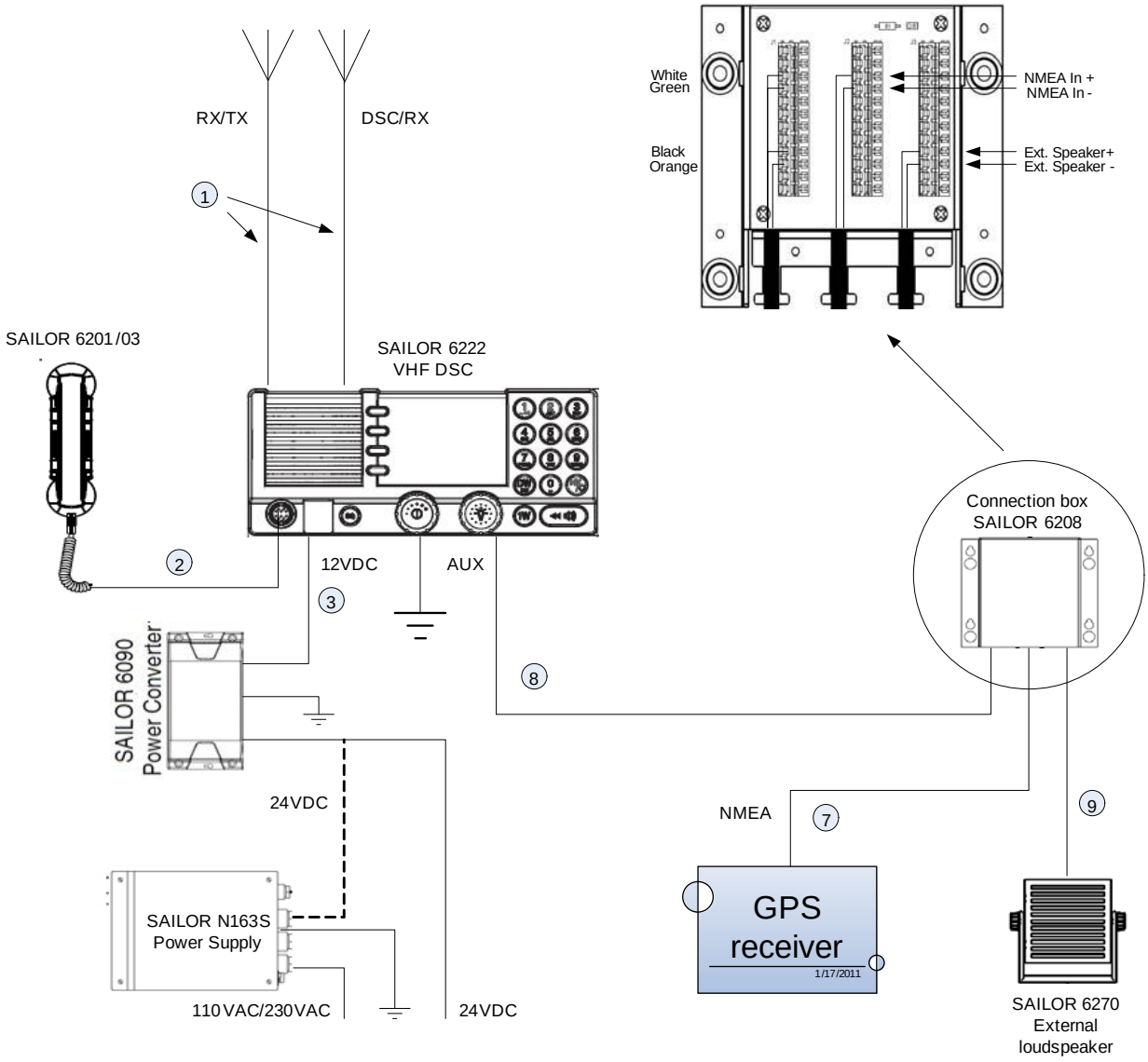

Figure B-5: System configuration, GPS and SAILOR 6270 External loudspeaker

B.1.6 How to install 2 extra SAILOR 6201 Handsets and a GPS

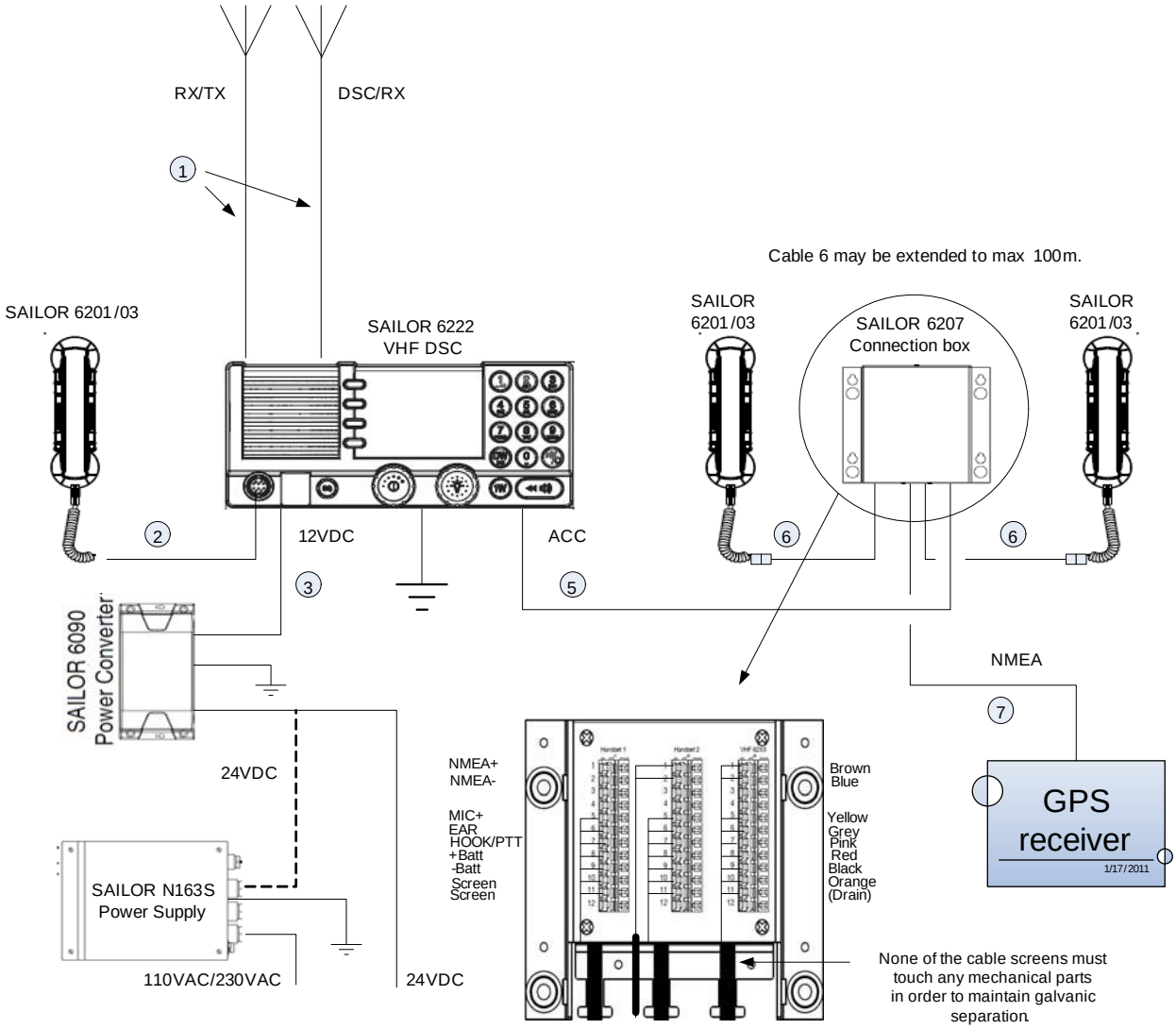

Figure B-6: System configurations, 2 SAILOR 6201 Handsets and a GPS

B.1.7 How to install an extra Handset SAILOR 6201 in SAILOR 6207

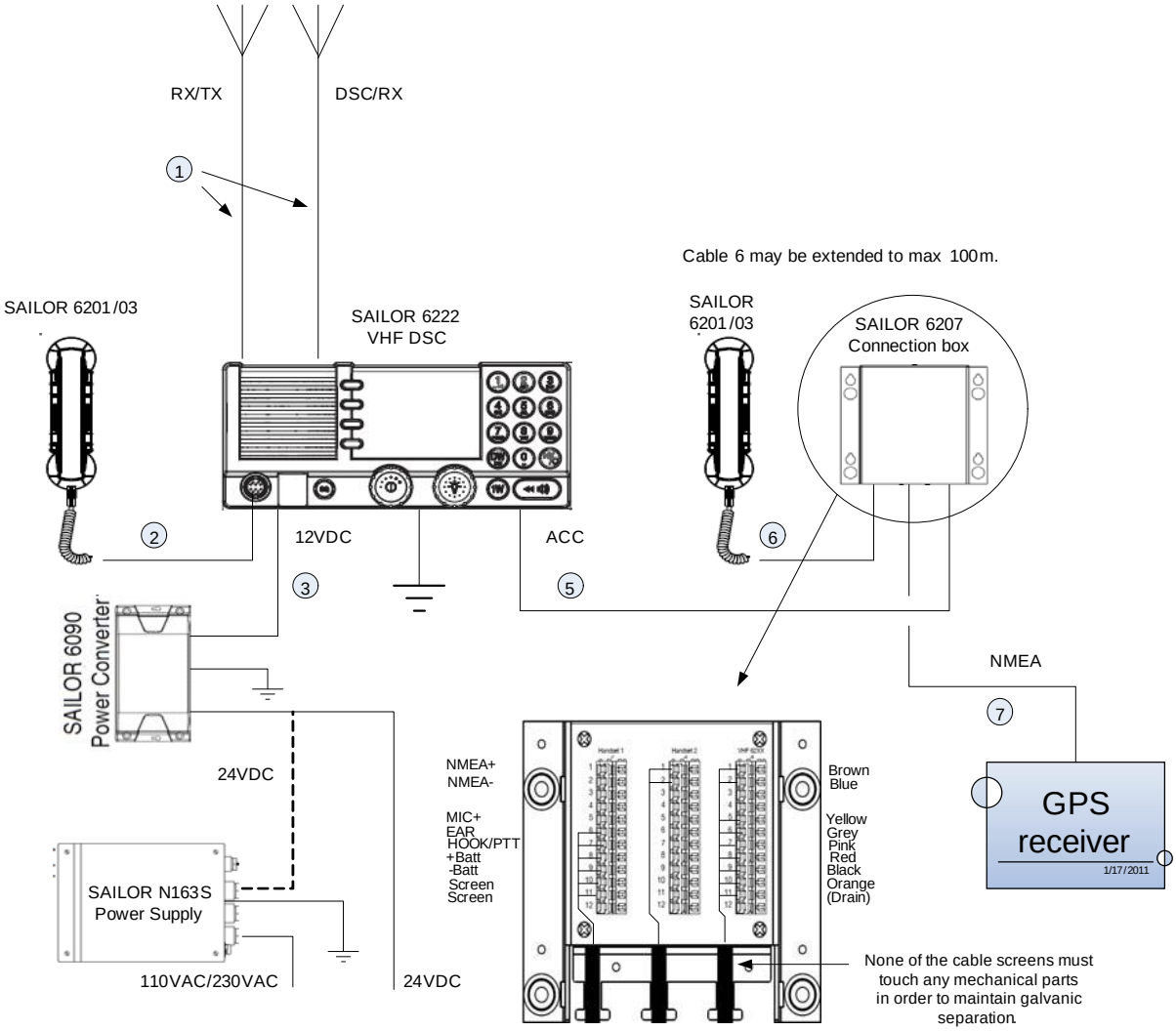

Figure B-7: System configurations, extra handset SAILOR 6201 in SAILOR 6207

B.1.8 How to install a SAILOR 6202 Handmicrophone, an extra SAILOR 6201 and a GPS

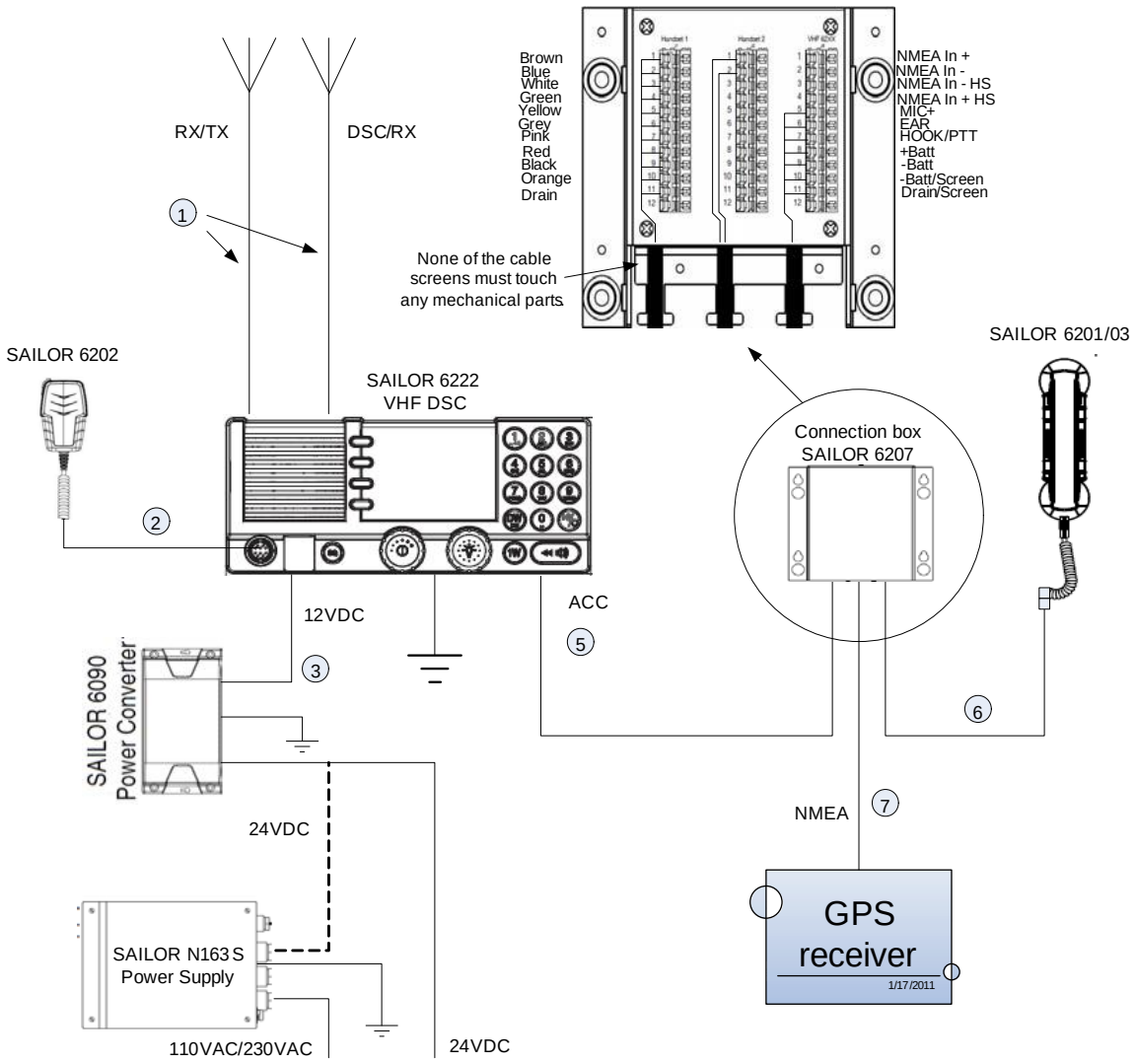

Figure B-8: System configuration, SAILOR 6202 Handmic., SAILOR 6201 Handset, GPS

B.1.9 How to install a GPS to the ACC port with a SAILOR 6208 Connection Box

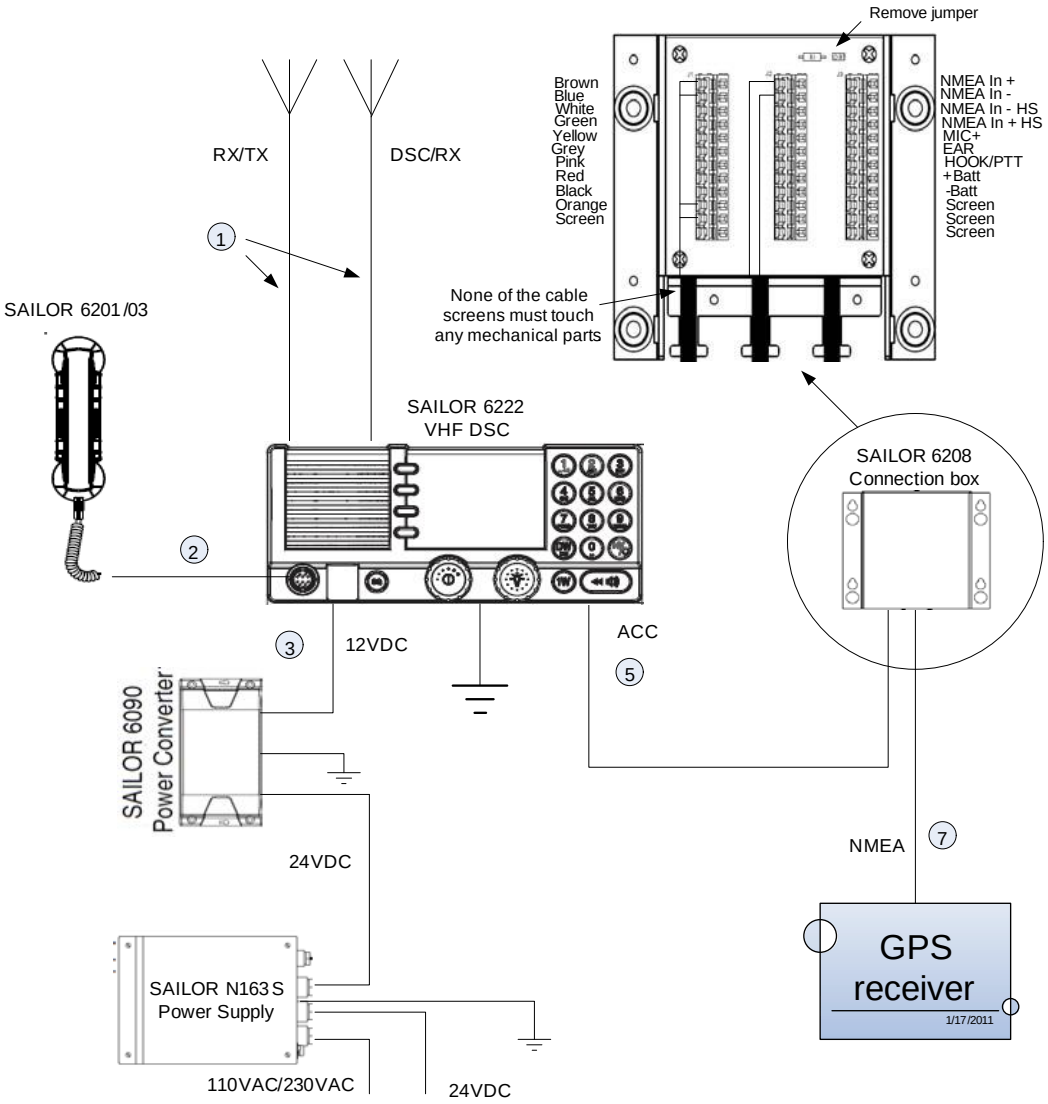

Figure B-9: System configuration, GPS and SAILOR 6208 Connection Box

B.1.10 How to install a GPS to the ACC port using a SAILOR 6207 Connection Box

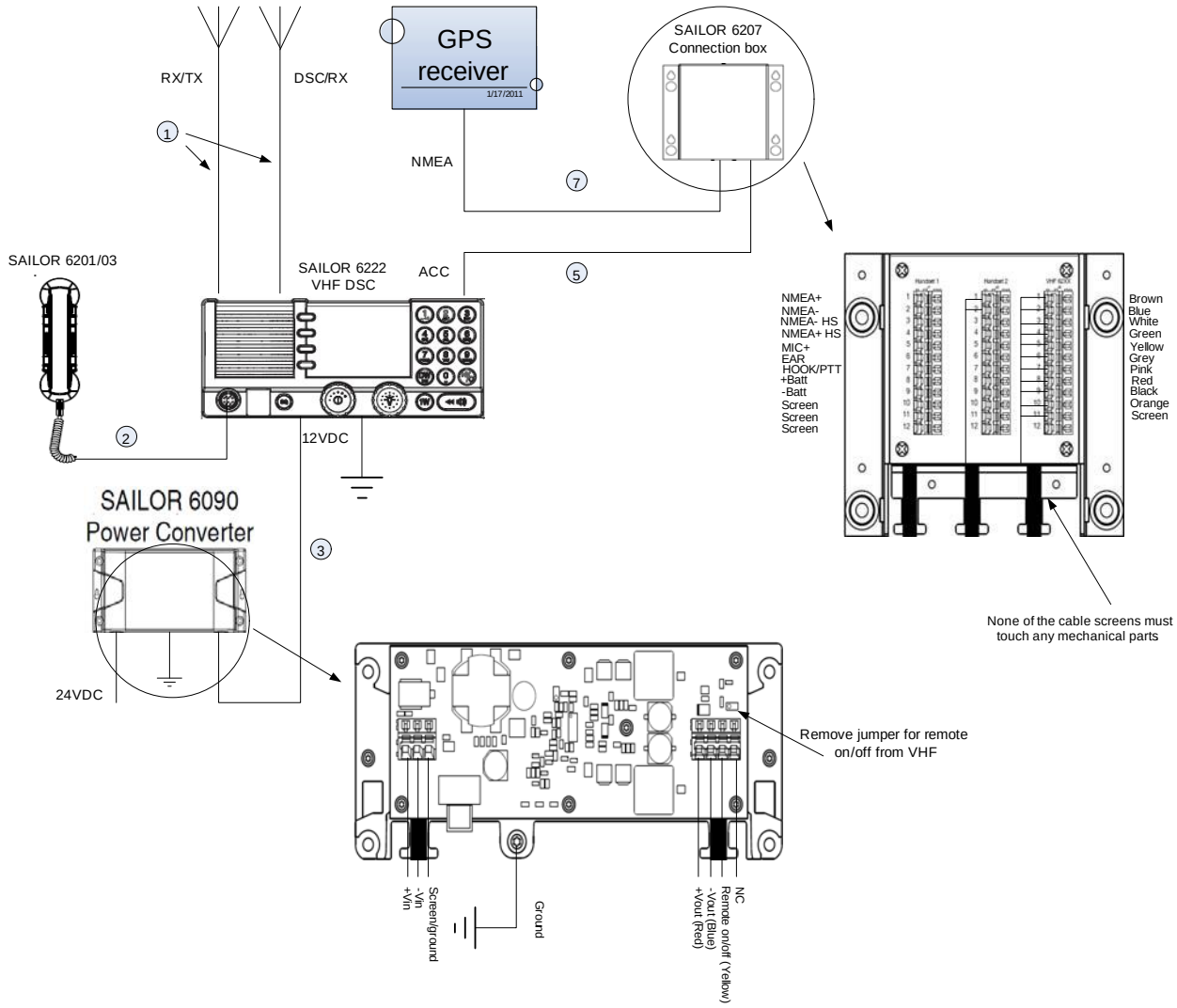

Figure B-10: System configuration, GPS and SAILOR 6207 Connection Box

B.1.11 How to install a CAN bus with a SAILOR 6204 CSM close to the VHF radio

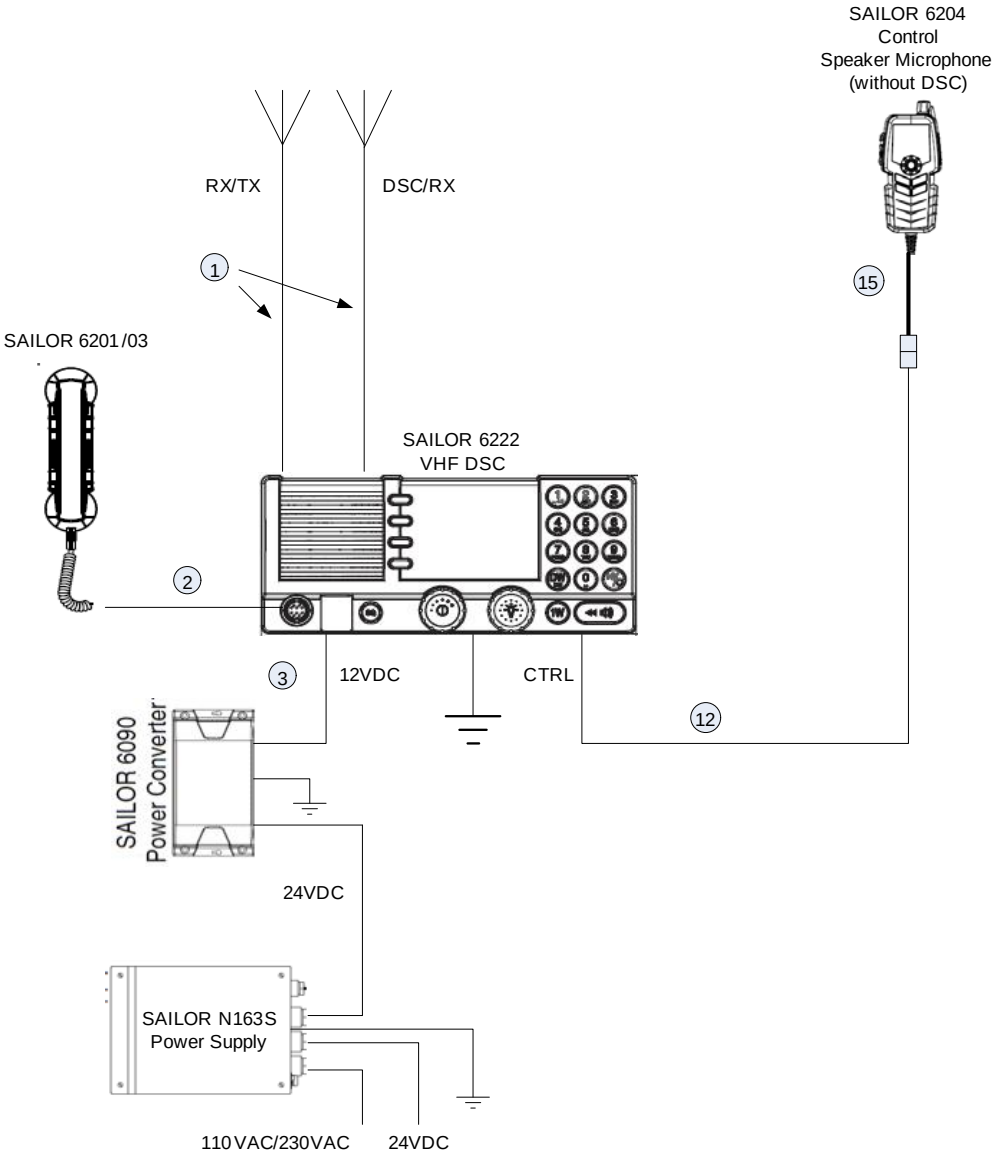

Figure B-11: System configuration, CAN bus, SAILOR 6204 CSM, close to the VHF radio

B.1.12 How to install a CAN bus with a SAILOR 6204 CSM not close to the VHF radio

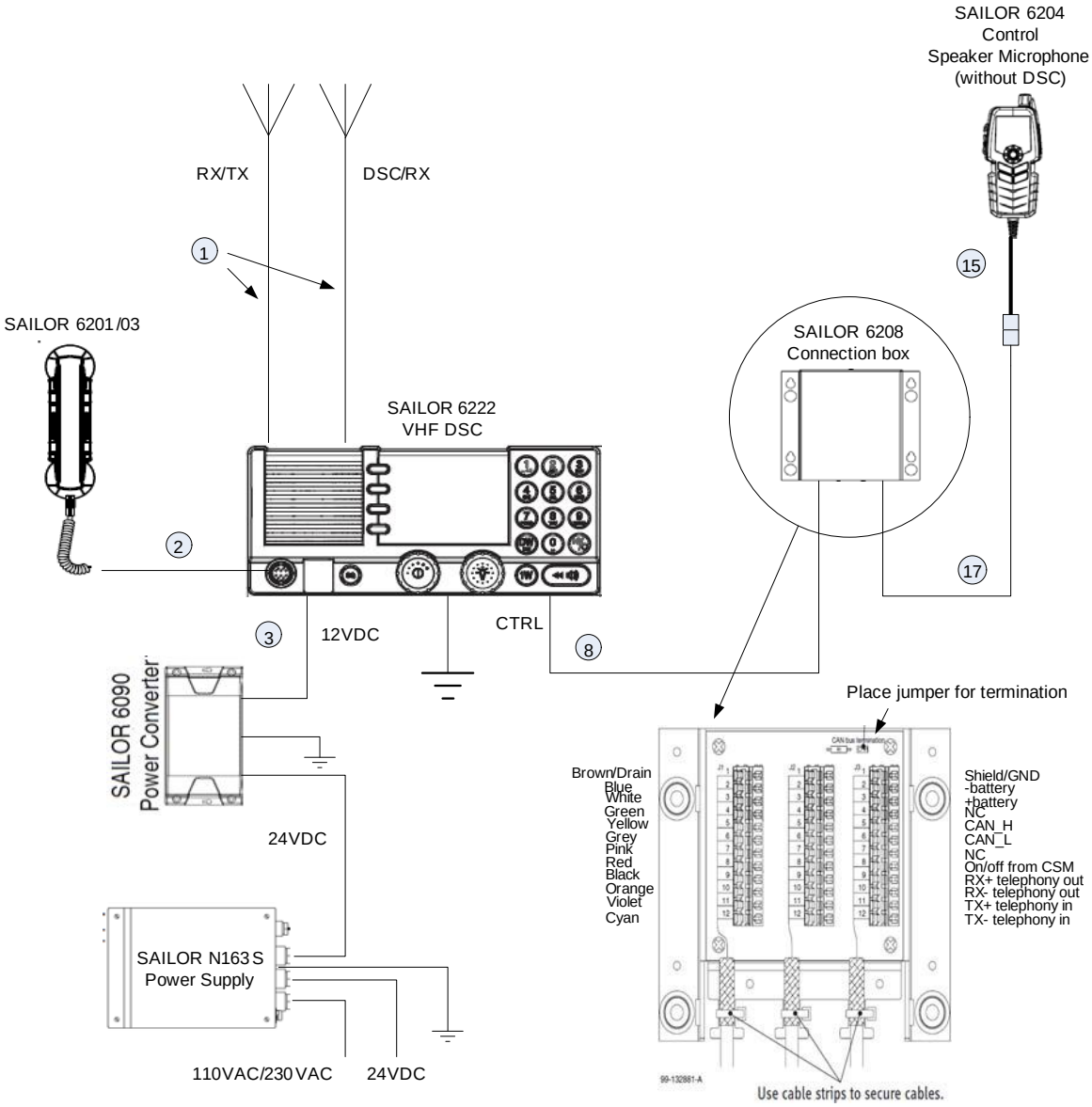

Figure B-12: System configuration, CAN bus, SAILOR 6204 CSM, not close to the VHF radio

B.1.13 How to install a CAN bus with a SAILOR 6204 CSM far from the VHF radio

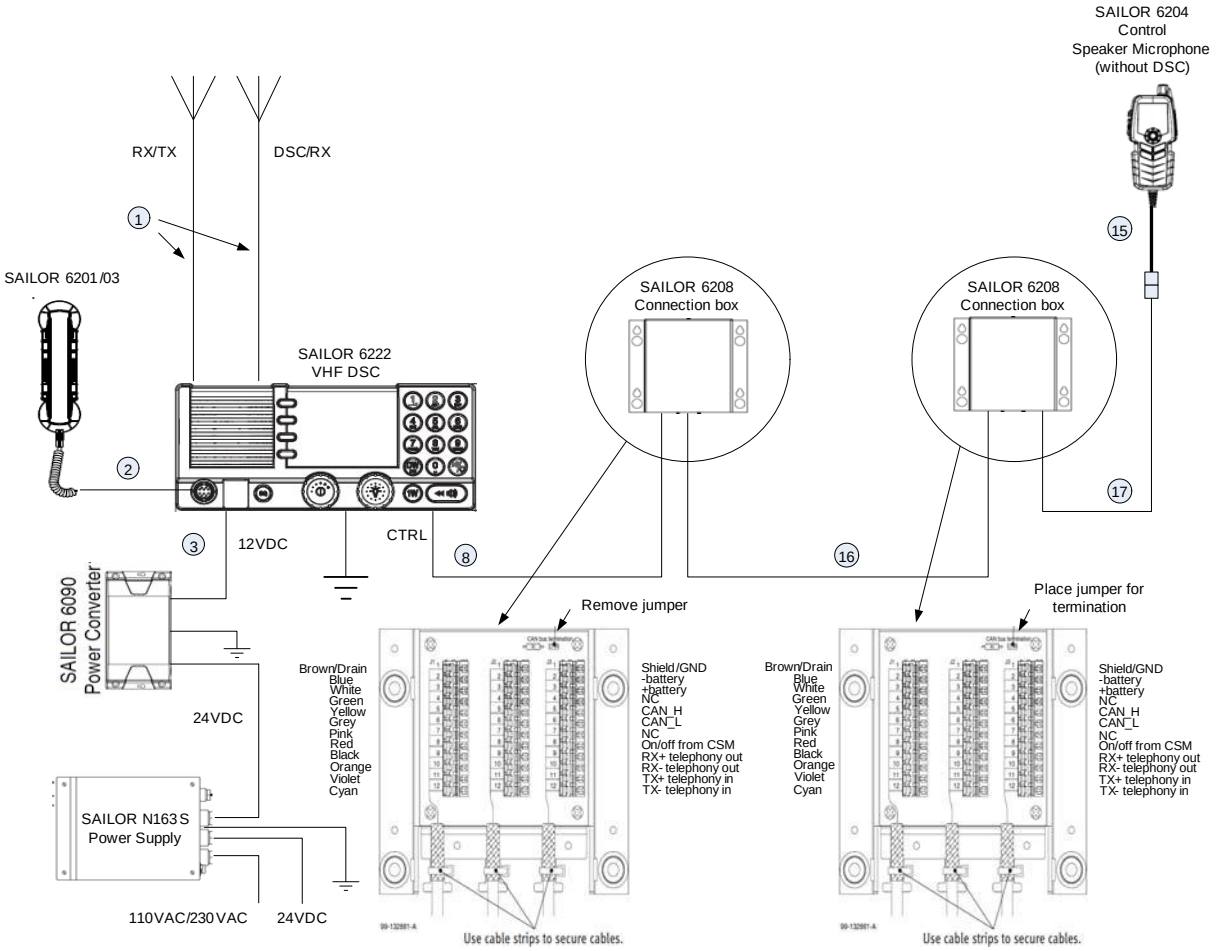

Figure B-13: System configuration, CAN bus, SAILOR 6204 CSM, far from the VHF radio

B.1.14 How to install a CAN bus with 2 SAILOR 6204 CSMs close to the VHF radio

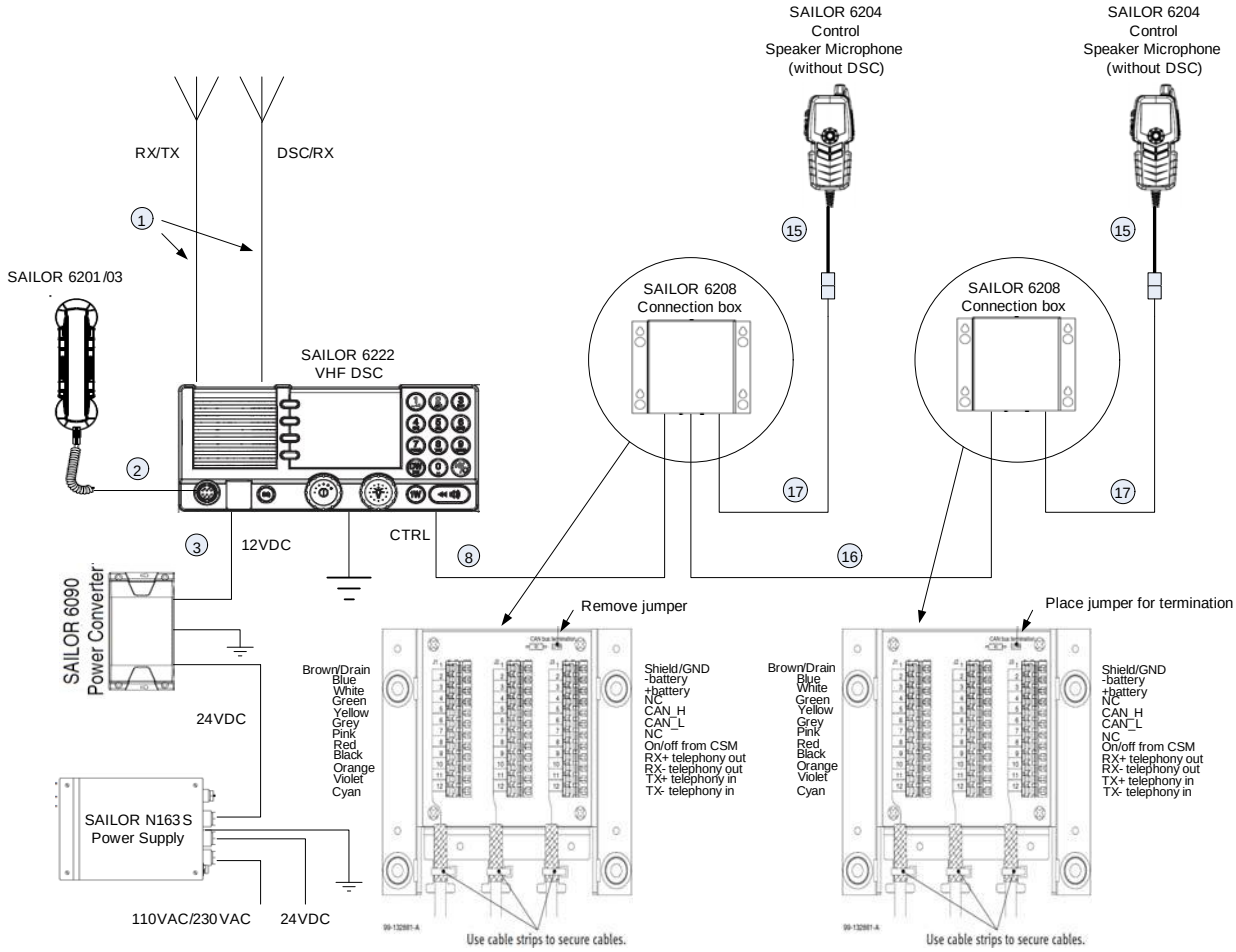

Figure B-14: System configuration, CAN bus, 2 SAILOR 6204 CSMs, close to VHF radio

B.1.15 How to install a CAN bus with 2 SAILOR 6204 CSMs far from the VHF radio

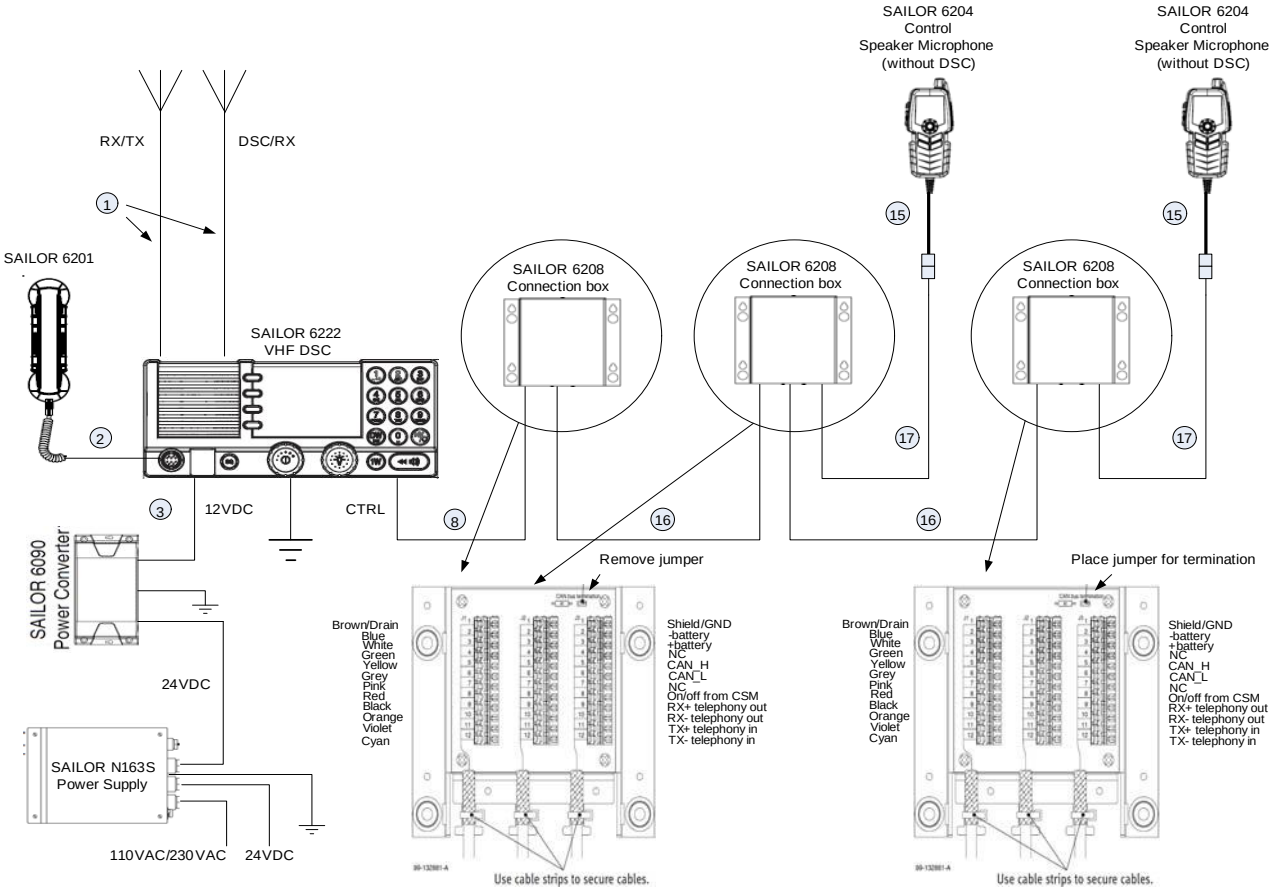

Figure B-15: System configuration: CAN bus, 2 SAILOR 6204 CSMs, far from VHF radio

B.1.16 How to install a CAN bus with 2 SAILOR 6204 CSMs close to each other

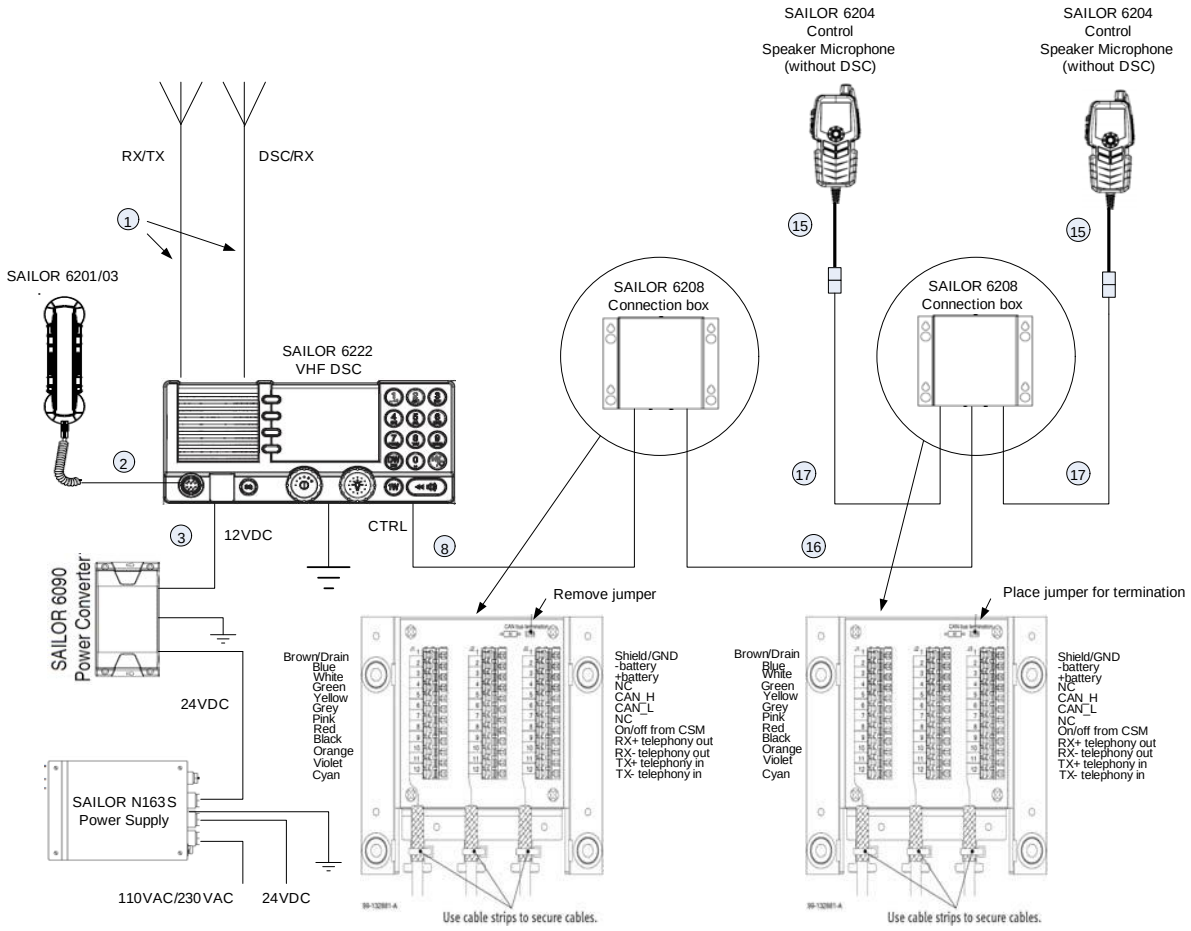

Figure B-16: System configuration: CAN bus, 2 SAILOR 6204 CSMs, close to each other

B.2 Cable requirements

The following cable information relates to the cable numbers in the system configuration drawings on the previous pages.

Cable	Part number	Description	Specification	Remarks
1		Antenna cable	RG124 or better	
2		Handset cable	1 m, spiraled	Part of handset
3	TT-37-131344	Power cable	1.5 m power cable	Included in 406222A
4	Not a T&T part	3-wire power cable, shielded	Depends on length	24 VDC, 4 A
5	406209-941	5 m cable for SAILOR 6207 Connection Box	10-pole LTW cable with screen	Included in Connection Box 406207A
6	406209-940	5 m cable for bulk mount	10-pole LTW cable with screen	
7			2-pole screened cable for NMEA	
8	406208-941	5 m cable for Connection Box SAILOR 6208	12-pole LTW cable with screen	Included in Connection Box 406208A
9			2-pole screened cable for loudspeaker	
10		0.3 m	Earth connection	
11		3 m	LAN, Ethernet cable	Shielded
12	406204-940	5 m cable for SAILOR 6204 Control Speaker Microphone	12-pole LTW cable for CAN, with screen	Extension cable with LTW plugs in both ends
13		3 m audio cable	Test cable	
14		1.5 m power cable		
15		Cable for SAILOR 6204 Control Speaker Microphone	2.5 m, spiraled	Part of handset
16		Cable for CAN	Screened with twisted pairs, max. 100 m	Extension cable for CAN bus
17	406204-940	Cable (12). Plug for CTRL is removed and wires connected to connection box	12-pole LTW cable with screen	Extension cable with LTW bulk mount plug

Table B-1: Cable overview

Cable 1

Cable type: Coax cable RG 214 or better.

Cable 2 (Handset, cable included)

SAILOR 6222 Front connector LTW 10-pin, circular male	Signal designation	Signal description
Pin 1	NC	
Pin 2	NC	
Pin 3	NC	
Pin 4	NC	
Pin 5	MIC+	Microphone signal
Pin 6	Earpiece	Earpiece signal
Pin 7	Hook_PTT	Hook/PTT signal
Pin 8	Battery+ (10.8-15.6 VDC)	Battery supply when radio is on
Pin 9	Internal GND = -Battery	Equipment ground
Pin 10	Internal GND = -Battery	Equipment ground

Table B-2: Cable specifications for cable 2

Cable 3 (Power cable, included in 406222A)

Cable type: 3-wire cable.

+ VDC	Red
0 VDC	Blue
ON/OFF	Yellow

Table B-3: Cable specifications for cable 3

Note External power supply input is galvanically isolated from equipment ground reference, i.e. chassis.

Equipment internal power supply reference (-) is at equipment ground reference, i.e. chassis.

Cable 4 (Power cable)

Cable type: 3-wire screened cable.

Cable 5 (Cable for SAILOR 6207 Connection Box)

Cable type: 10-wire screened cable.

Part number: 406209-941

SAILOR 6222 ACC connector LTW 10-pin, circular male	Signal designation	Cable pin 406209-941 (5 m)	SAILOR 6209 Connection Box In from VHF	SAILOR 6209 Connection Box Ext. connections	Signal description
Pin 1	NMEA In+	Brown	1-1	2(3)-1	Impedance: 600 Ohm. Max. 2 mA at min. level of 2 V (61162-1)
Pin 2	NMEA In-	Blue	1-2	2(3)-2	
Pin 3	NMEA In-	White	1-3	2(3)-3	Impedance: 600 Ohm. Max. 2 mA at min. level of 2 V (61162-2)
Pin 4	NMEA In+	Green	1-4	2(3)-4	
Pin 5	MIC+	Yellow	1-5	2(3)-5	Microphone signal
Pin 6	Earpiece	Grey	1-6	2(3)-6	Earpiece signal
Pin 7	Hook_PTT	Pink	1-7	2(3)-7	Hook/PTT signal
Pin 8	Battery+ (10.8-15.6 VDC)	Red	1-8	2(3)-8	Battery supply when radio is on
Pin 9	Internal GND = -Battery	Black	1-9	2(3)-0	Equipment ground
Pin 10	Internal GND = -Battery	Orange - SCREEN (Drain)	1-10	2(3)-10	Equipment ground

Table B-4: Cable specifications for cable 5

Cable 6

Connection cable for bulkhead mount, 5 m.

Part number: 406209-940

Cable 7

2-wire screened cable for NMEA.

Cable 8 (AUX)

Part number: 406208-941

SAILOR 6222 AUX connector LTW 12-pin, circular male	Signal designation	Cable pin 406208-941 (5 m)	SAILOR 6208 Conn. Box In from VHF	SAILOR 6208 Conn. Box Out of box	SAILOR 6208 Conn. Box Out of box	Signal description	Ships cable 6 twisted pairs overall screen
Pin 1	Shield/GND	Brown	J1-1	J2-1	J3-1	Equipment ground	paired with no. 8
Pin 2	Lo Power	Blue	J1-2	J2-2	J3-2	Low power forced control. Active when connected to ground	paired with no. 3
Pin 3	NMEA+ In	White	J1-3	J2-3	J3-3	Impedance: 600 Ohm. Max. 2 mA at min. level of 2 V (61162-2)	paired with no. 2
Pin 4	NMEA- In	Green	J1-4	J2-4	J3-4		paired with no. 7
Pin 5	AUX	Yellow	J1-5	J2-5	J3-5	Open Collector output. Closing on event predefined through service programming[a]	paired with no. 6
Pin 6	DSC Call	Grey	J1-6	J2-6	J3-6	Open Collector output. Closing on incoming DSC call (see footnote)	paired with no. 5
Pin 7	DSC Alarm	Pink	J1-7	J2-7	J3-7	Open Collector output. Closing on incoming DSC alert (see footnote)	paired with no. 4
Pin 8	Battery-	Red	J1-8	J2-8	J3-8	Battery GND	paired with no. 1
Pin 9	Ext. Speaker+	Black	J1-9	J2-9	J3-9	VHF radio external speaker output, nom. 6 W into 8 Ohm	paired with no. 10
Pin 10	Ext. Speaker+	Orange	J1-10	J2-10	J3-10		paired with no. 9
Pin 11	VDR+	Purple	J1-11	J2-11	J3-11	Mixed RX/TX audio output for recording. Galvanically isolated, balanced signal, 0 dBm into 600 Ohm	paired with no. 12
Pin 12	VDR-	Light green	J1-12	J2-12	J3-12		paired with no. 11

Table B-5: Cable specifications for cable 8 (AUX)

a. 24 VDC, max. 100 mA

CAN cable (Cable 8 - CTRL)

Part number: 406208-941

SAILOR 6222 CTRL connector LTW 12-pin, circular male	Signal designation	Cable pin 406208-941 (5 m)	SAILOR 6208 Conn. Box In from VHF	SAILOR 6208 Conn. Box Out of box	SAILOR 6208 Conn. Box Out of box	Signal description	Ships cable 6 twisted pairs overall screen
Pin 1	Shield/GND	Brown	J1-1	J2-1	J3-1	Equipment ground	paired with no. 8
Pin 2	Battery-	Blue	J1-2	J2-2	J3-2	Battery -	paired with no. 3
Pin 3	Battery+	White	J1-3	J2-3	J3-3	10.8-15.6 VDC from VHF radio	paired with no. 2
Pin 4	Battery+	Green	J1-4	J2-4	J3-4	10.8-15.6 VDC from VHF radio	paired with no. 7
Pin 5	CAN_H	Yellow	J1-5	J2-5	J3-5	CAN bus data	paired with no. 6
Pin 6	CAN_L	Grey	J1-6	J2-6	J3-6		paired with no. 5
Pin 7	Battery-	Pink	J1-7	J2-7	J3-7	Battery -	paired with no. 4
Pin 8	ON/OFF from CSM	Red	J1-8	J2-8	J3-8	ON/OFF signal from Control Speaker Microphone	paired with no. 1
Pin 9	RX+	Black	J1-9	J2-9	J3-9	RX telephony (out)	paired with no. 10
Pin 10	RX-	Orange	J1-10	J2-10	J3-10		paired with no. 9
Pin 11	TX+	Purple	J1-11	J2-11	J3-11	TX telephony (in)	paired with no. 12
Pin 12	TX-	Light green	J1-12	J2-12	J3-12		paired with no. 11

Table B-6: Cable specifications for cable 8 (CTRL)

A

ACC	Accessories

C

CAN	Controller-Area Network. A message based protocol designed to allow microcontrollers and devices to communicate with each other within a vehicle without a host computer.
CSM	Control Speaker Microphone ,
CTRL	Control

D

DSC	Digital Selective Calling

G

GGA	NMEA sentence, essential fix data which provide 3D location and accuracy data.
GLL	NMEA sentence, Geographic Latitude and Longitude
GNS	NMEA sentence,
GPS	Global Positioning System

L

LAN	Local Area Network
LTW	LTW Technology is a professional designer and manufacturer of waterproof connectors.

N

NMEA	National Marine Electronics Association, specification for communication between marine electronic devices

R

RMC	NMEA sentence, version of essential gps position, velocity, time data.

U

UTC	Coordinated Universal Time. The International Atomic Time (TAI) with leap seconds added at irregular intervals to compensate for the Earth's slowing rotation. Leap seconds are used to allow UTC to closely track UT1, which is mean solar time at the Royal Observatory, Greenwich.

V

VDR	Voyage Data Recorder, a data recording system designed for all vessels required to comply with the IMO's International Convention SOLAS Requirements in order to collect data from various sensors on board the vessel.
VHF	Very High Frequency
VSWR	Voltage Standing Wave Ratio,

Z

ZDA	NMEA sentence, date and time.

A

ACC connector, 2-12
action line, display, 1-3
adjust
  speaker volume, 3-1
ANT connector, 2-17

B

backlight, 1-1
browse channels, 3-1

C

cable
  CAN, B-22
cable for VHF antenna, 2-17
cable overview, B-18
cable requirements, B-18
CAN cable, B-22
change MMSI number, 3-2
channel
  select, 3-1
  working, 3-1
compass safe distance, 2-2
configuration
  system example, 1-6
configurations
  examples, B-1
  systems, B-1
connector
  ACC, 2-12
  ANT, 2-17
  CTRL, 2-14, 2-15
  ground, 2-17
  VHF antenna, 2-17
contact, 4-1
controls, front plate, 1-2
cradle for 6201, installation, 1-4
CTRL connector, 2-14, 2-15

D

data rate
  NMEA, A-3
delivery, items included, 2-1
display, 1-3
document number, this manual, -i
DSC
  loopback test, 4-2

E

emergency calls, -iv
error messages, 4-1

F

flush mount, 2-6
frequency range, VHF, A-1
front plate, controls, 1-2
fuse
  Power Converter, 4-5
  VHF radio, 4-5

G

GPS input, 2-12, 2-21
ground stud, 2-17
grounding, 2-17

H

hand microphone
  installing, 2-9
handset cradle
  installation, 1-4
how to replace, 4-5

I

input
  GPS, 2-21
  handset, 2-21
installation
  cradle for 6201, 1-4
  desktop, 2-3
  flush mount, 2-6
  handset cradle, 1-4
  mounting bracket, 2-4
  overhead, 2-4
IP rating, A-2

K

keys on front plate, 1-2

L

louder, volume, 3-1

M

manual, document number, -i
MAYDAY, -iv
MMSI
  number, changing, 3-2
  number, reviewing, 3-2
mounting, 2-2
  flush mount, 2-6
  with mounting bracket, 2-4

N

NMEA, 2-12
  data rate, A-3
  interface, 2-13
NMEA HS, 2-12

P

power
  fuse, 4-5
  off, 3-1
  on, 3-1
power cable, B-20
Power Converter
  fuse, 4-5
power converter
  technical specifications, A-4
power up, 3-1

R

replay, 1-1
  button, 1-2
review MMSI number, 3-2
RF exposure hazards, -iii

S

safety summary, -iii
salt deposits, 4-1
selector wheel knob, 1-2, 3-1
self test, 4-1
semi duplex, 1-1
service line, display, 1-3
service tool, 3-2
ship ground, 2-17
simplex, 1-1
softer, volume, 3-1
speaker volume, 3-1
specifications, A-1
squelch control, 1-2
support, 4-1
system configuration
  example, 1-6

T

technical data, A-1
temperature
  operational, A-1, A-4
  storage, A-1, A-4

U

UTC time, 1-3

V

VHF
antenna cable, 2-17
antenna connector, 2-17
frequency range, A-1
volume
louder, 3-1
softer, 3-1
speaker, 3-1
Volume wheel knob, 1-2

W

warnings, 4-1
warranty, 4-6
limitation, -iii
water ingress, A-2
weight, A-1, A-4
wheel knob
selector, 1-2
volume, 1-2
working channel, 3-1

98-132904-A